VILLAGE POINT
VILLAGE POINTE DRIVE PHASE IV

PROJECT NO.: 15–077

CLIENT:

THE VILLAGE OF CLEMMONS
3715 CLEMMONS ROAD
CLEMMONS, NC 27012
PHONE: (336) 766-7511

CIVIL ENGINEER:

Stimmel Landscape Architecture Civil Engineering Land Planning
Stimmel Associates, PA
601 N. Trade Street
Suite 200
Winston Salem, NC
27101-2916
P: 336.723.1067
F: 336.723.1069

DRAWING INDEX:

	COVER SHEET
C-2.0	STRIPING AND SIGNAGE PLAN
C-3.0	GRADING AND EROSION CONTROL - STAGE I
C-3.1	GRADING AND EROSION CONTROL - STAGE II
C-3.2	GRADING AND EROSION CONTROL - STAGE III
C-3.3	EROSION CONTROL NOTES
C-4.0	OVERALL UTILITY PLAN
C-4.1	VILLAGE POINT DRIVE STA. 10+00.00 TO STA. 22+50.00
C-4.2	VILLAGE POINT DRIVE STA 22+00.00 TO STA 25+50.53
C-4.3	66" CULVERT PLAN AND PROFILE STA 16+82.84
C-4.4	CULVERT PLAN AND PROFILE STA. 20+06.93, STA 25+29.89
C-6.0	ROADWAY DETAILS
C-6.1	TYPICAL STREET SECTIONS
C-6.2	STORM DRAINAGE DETAILS
C-6.3	WATER AND SEWER DETAILS
C-6.4	EROSION CONTROL DETAILS
C-6.5	EROSION CONTROL DETAILS
L-1.0	STREET TREE PLANTING PLAN PH4
L-2.0	LANDSCAPE NOTES, SPECS. & DETAILS

GENERAL NOTES:

1. THE CONTRACTOR SHALL VISIT THE SITE,TO INFORM AND SATISFY HIMSELF OF ALL EXISTING CONDITIONS PRIOR TO BEGINNING THE PROJECT. ANY DISCREPANCY BETWEEN THE SITE AND THOSE CONDITIONS REPRESENTED ON THE DRAWINGS SHALL BE BROUGHT TO THE ATTENTION OF THE OWNER AND THE ENGINEER IMMEDIATELY.
2. ALL DIMENSIONS, RADII, AND NORTHING & EASTING COORDINATES ARE TO BACK OF CURB, CENTER OF STRUCTURES SUCH AS INLETS, MANHOLES, ETC., OR END OF PIPE RUNS AS APPLICABLE UNLESS NOTED OTHERWISE. WAFFLE STYLE STRUCTURES ARE NOT ALLOWED.
3. ALL EXISTING UTILITIES OR STRUCTURES INDICATED ON THE DRAWINGS ARE BASED ON AVAILABLE INFORMATION OF RECORD. THE CONTRACTOR IS REQUIRED TO TAKE PRECAUTIONARY MEASURES TO PROTECT THE UTILITY LINES SHOWN HEREON AND ANY OTHER EXISTING LINES NOT OF RECORD OR NOT SHOWN ON THESE PLANS. THE CONTRACTOR SHALL BE RESPONSIBLE FOR MAKING ARRANGEMENTS FOR THE RELOCATION OR REMOVAL OF EXISTING UTILITIES AND AGREES TO BE FULLY RESPONSIBLE FOR ANY AND ALL DAMAGES RESULTING FROM HIS FAILURE TO LOCATE AND PRESERVE ANY AND ALL UNDERGROUND UTILITIES. BEFORE STARTING WORK THE CONTRACTOR SHALL CONTACT ULOCO AT 1 (800) 632-4949 TO HAVE ALL EXISTING UTILITIES LOCATED.
4. LOCATION AND ELEVATIONS OF IMPROVEMENTS, TO BE MET OR CROSSED BY WORK, SHALL BE CONFIRMED BY FIELD MEASUREMENT, SUFFICIENTLY AHEAD OF CONSTRUCTION TO PERMIT REVISIONS TO THE PLANS, IF REVISIONS ARE NECESSARY DUE TO ACTUAL LOCATION OF EXISTING UTILITIES.
5. THE CONTRACTOR AGREES THAT HE SHALL ASSUME SOLE AND COMPLETE RESPONSIBILITY FOR JOB SITE CONDITIONS DURING THE COURSE OF CONSTRUCTION OF THIS PROJECT, INCLUDING SAFETY OF ALL PERSONS AND PROPERTY AND THAT THIS REQUIREMENT SHALL APPLY CONTINUOUSLY AND NOT BE LIMITED TO NORMAL WORKING HOURS AND THAT THE CONTRACTOR SHALL DEFEND, INDEMNIFY, AND HOLD THE OWNER AND THE ENGINEER HARMLESS FROM ANY AND ALL LIABILITY, REAL OR ALLEGED IN CONNECTION WITH PERFORMANCE OF WORK ON THIS PROJECT, EXCEPTING FOR LIABILITY ARISING FROM THE SOLE NEGLIGENCE OF THE OWNER OR THE ENGINEER.
6. THE CONTRACTOR SHALL VERIFY THAT ALL REQUIRED PERMITS AND APPROVALS HAVE BEEN OBTAINED FROM THE APPROPRIATE AUTHORITIES BEFORE BEGINNING WORK ON THE PROJECT.
7. ALL CONSTRUCTION, MATERIALS, AND WORKMANSHIP SHALL CONFORM TO THE FOLLOWING:

   EROSION CONTROL - NCDOT SPECIFICATIONS

   STORM DRAINAGE - NCDOT STANDARDS AND SPECIFICATIONS

   WATER AND SANITARY SEWER - CITY OF WINSTON SALEM STANDARDS & SPECIFICATIONS

   ASPHALT PAVEMENT, CURB & GUTTER - NCDOT STANDARDS AND SPECIFICATIONS

   STRIPING - NCDOT STANDARDS AND SPECIFICATIONS

   SIGNAGE - MANUAL FOR UNIFORM TRAFFIC CONTROL DEVICES, LATEST EDITION

   IN THE EVENT OF A CONFLICT BETWEEN THE DRAWINGS AND THESE STANDARDS, THE MORE STRINGENT REQUIREMENT SHALL APPLY AS DETERMINED BY THE ENGINEER.
8. THE CONTRACTOR IS RESPONSIBLE FOR COORDINATING HIS WORK WITH THE WORK OF OTHER CONTRACTORS ON THE PROJECT TO AVOID CONFLICT.
9. ALL WORK ON THE PERMANENT STRUCTURES SHALL BE CARRIED OUT IN AREAS FREE FROM WATER. THE CONTRACTOR SHALL CONSTRUCT AND MAINTAIN ALL TEMPORARY DIKES, LEVEES, COFFER DAMS, DRAINAGE CHANNELS, AND STREAM DIVERSIONS NECESSARY TO PROTECT THE AREAS TO BE OCCUPIED BY THE PERMANENT WORKS. THE CONTRACTOR SHALL ALSO FURNISH, INSTALL, OPERATE AND MAINTAIN ALL NECESSARY PUMPING AND OTHER EQUIPMENT REQUIRED FOR REMOVAL OF WATER FROM THE VARIOUS PARTS OF THE WORK AND FOR MAINTAINING THE EXCAVATIONS, FOUNDATION, AND OTHER PARTS OF THE WORK FREE FROM WATER AS REQUIRED OR DIRECTED BY THE ENGINEER FOR CONSTRUCTING EACH PART OF THE WORK. AFTER HAVING SERVED THEIR PURPOSE, ALL TEMPORARY PROTECTIVE WORKS SHALL BE REMOVED OR LEVELED AND GRADED TO THE EXTENT REQUIRED TO PREVENT OBSTRUCTION IN ANY DEGREE WHATSOEVER OF THE FLOW OF WATER TO THE SPILLWAY OR OUTLET WORKS AND SO AS NOT TO INTERFERE IN ANY WAY WITH THE OPERATION OR MAINTENANCE OF THE STRUCTURE. STREAM DIVERSIONS SHALL BE MAINTAINED UNTIL THE FULL FLOW CAN BE PASSED THROUGH THE PERMANENT WORKS.

NPDES STORMWATER NOTES:

THIS PROJECT IS SUBJECT TO THE REQUIREMENTS OUTLINED IN NORTH CAROLINA GENERAL STATUTE 143-215.1 GENERAL STORMWATER PERMIT

THIS GENERAL PERMIT IS APPLICABLE TO POINT SOURCE DISCHARGES OF STORMWATER FROM CONSTRUCTION ACTIVITIES DISTURBING ONE OR MORE ACRES OF LAND. THE SUBMISSION OF A PROPOSED EROSION AND SEDIMENTATION CONTROL PLAN TO THE DIVISION OF LAND RESOURCES OR DELEGATED LOCAL PROGRAM SHALL BE CONSIDERED TO TAKE THE PLACE OF A NOTICE OF INTENT FOR COVERAGE UNDER THIS GENERAL PERMIT FOR THOSE PROJECTS REQUIRING THIS PERMIT COVERAGE. COVERAGE UNDER THIS GENERAL PERMIT SHALL BECOME EFFECTIVE UPON ISSUANCE OF AN APPROVAL FOR THE EROSION AND SEDIMENTATION CONTROL PLAN BY THE LAND QUALITY SECTION OF THE DIVISION OF LAND RESOURCES OR DELEGATED LOCAL PROGRAM. PRIOR TO THE COMMENCEMENT OF CONSTRUCTION AND LAND DISTURBING ACTIVITIES APPROVAL OF THE EROSION AND SEDIMENTATION CONTROL PLAN SHALL BE OBTAINED.

ALL EROSION AND SEDIMENTATION CONTROL FACILITIES SHALL BE INSPECTED BY OR UNDER THE DIRECTION OF THE PERMITTEE AT LEAST ONCE EVERY SEVEN CALENDAR DAYS (AT LEAST TWICE EVERY SEVEN DAYS FOR THOSE FACILITIES DISCHARGING TO WATERS OF THE STATE LISTED ON THE LATEST EPA APPROVED 303(D) LIST FOR CONSTRUCTION RELATED INDICATORS OF IMPAIRMENT SUCH AS TURBIDITY OR SEDIMENTATION) AND WITHIN 24 HOURS AFTER ANY STORM EVENT OF GREATER THAT 0.5 INCHES OF RAIN PER 24 HOUR PERIOD. A RAIN GAUGE SHALL BE MAINTAINED ON THE SITE AND A RECORD OF THE RAINFALL AMOUNTS AND DATES SHALL BE KEPT BY THE PERMITTEE. REFER TO THE GENERAL STORMWATER PERMIT FOR A COMPLETE LIST OF INSPECTION AND REPORTING REQUIREMENTS.

A COPY OF THIS PERMIT IS ATTACHED TO THE APPROVED PERMIT OR IT CAN BE DOWNLOADED FROM NCDENR'S WEBSITE

WETLANDS AND WATERS OF THE US (STREAMS) NOTE

THIS PROPERTY CONTAINS WETLANDS AND/OR WATERS OF THE US (STREAMS) THAT ARE UNDER JURISDICTION OF THE U.S. ARMY CORPS OF ENGINEERS AND THE NC DEPARTMENT OF ENVIRONMENT AND NATURAL RESOURCES. PERMITS FOR APPROVAL TO IMPACT A PORTION OF THE WETLANDS AND STREAMS HAVE BEEN SUBMITTED BUT NOT APPROVED. THEREFORE, NO STREAMS OR WETLANDS SHALL BE DISTURBED UNTIL THE APPROVALS ARE RECEIVED.

PRIOR TO CONSTRUCTION, THE CONTRACTOR IS RESPONSIBLE FOR HAVING THE SURVEYOR STAKE IN THE FIELD THE EXISTING STREAMS AND WETLANDS. DO NOT DISTURB THE EXISTING STREAMS AND/OR WETLANDS UNTIL THE PERMITS ARE APPROVED.

AFTER THE PERMITS ARE APPROVED, THE CONTRACTOR IS RESPONSIBLE FOR HAVING THE SURVEYOR STAKE IN THE FIELD THE IMPACT LIMITS TO ENSURE THAT NO CONSTRUCTION/ DISTURBANCE EXCEEDS THE PERMITTED LIMITS.

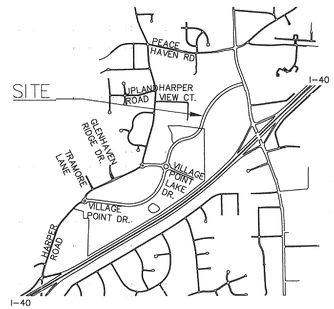

LOCATION MAP
1"=2000'

North

LEGEND:

752	EXISTING CONTOURS @ 2' INTERVALS
750	EXISTING CONTOURS @ 10' INTERVALS
750	PROPOSED CONTOUR
	RIGHT–OF–WAY
	CENTERLINE
	FUTURE CENTERLINE
	PROPERTY BOUNDARY
	EASEMENT LINE
	EXISTING TREELINE
	CREEK / WATER SURFACE
WL	DELINEATES WETLANDS
W	EXISTING WATERLINE
W	PROPOSED WATERLINE
	EXISTING FIRE HYDRANT AND VALVE
	PROPOSED FIRE HYDRANT
	EXISTING GATE VALVE
	PROPOSED GATE VALVE
	PROPOSED 45¹ BEND
SS	EXISTING SANITARY SEWER LINE
SS	PROPOSED SANITARY SEWER LINE
S	EXISTING SANITARY SEWER MANHOLE
S	PROPOSED SANITARY SEWER MANHOLE
SD	EXISTING STORM DRAINAGE LINE
	PROPOSED STORM DRAINAGE LINE
SD	EXISTING STORM DRAINAGE MANHOLE
	PROPOSED STORM DRAINAGE MANHOLE
	EXISTING YARD INLET
	PROPOSED YARD INLET
	EXISTING CURB INLET
	PROPOSED CURB INLET
	EXISTING CURB AND GUTTER
	PROPOSED CURB AND GUTTER
	INLET PROTECTION
	SILT FENCE
	TEMPORARY DIVERSION
	CLEARING LIMITS
	STREET LIGHT/OPEN TRADITION FIXTURES
	STREET LIGHT/FLAT LENS CUT OFF COBRA FIXTURE
	GUARDRAIL

OVERALL SITE PLAN:

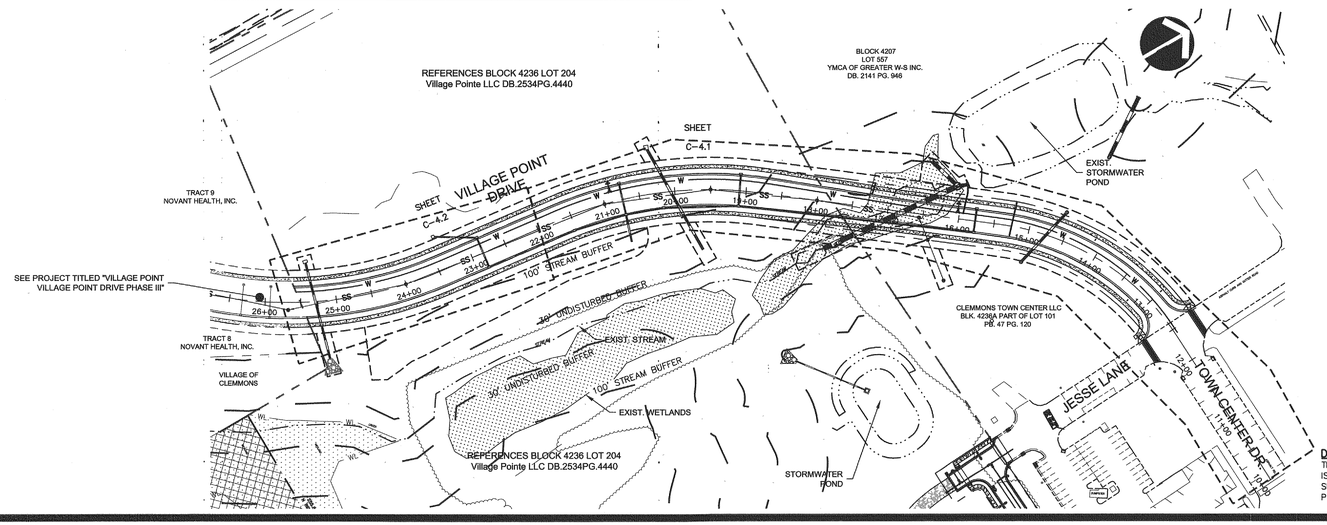

DISCLAIMER
THE BOUNDARY AND TOPOGRAPHIC INFORMATION HEREIN IS FROM SURVEY INFORMATION SUPPLIED BY SGROI LAND SURVEYING, 145 W. PARRIS AVENUE, SUITE 101, HIGH POINT, NC 27262

BEFORE YOU DIG !
CALL 1–800–632–4949
N.C. ONE–CALL CENTER
IT'S THE LAW !

NORTH CAROLINA PROFESSIONAL SEAL 027912 ENGINEER KELWAY L. HOWARD III
2/8/16

10/30/2015 ORIGINAL ISSUE DATE

REVISIONS:	
1	2/8/16 Comments

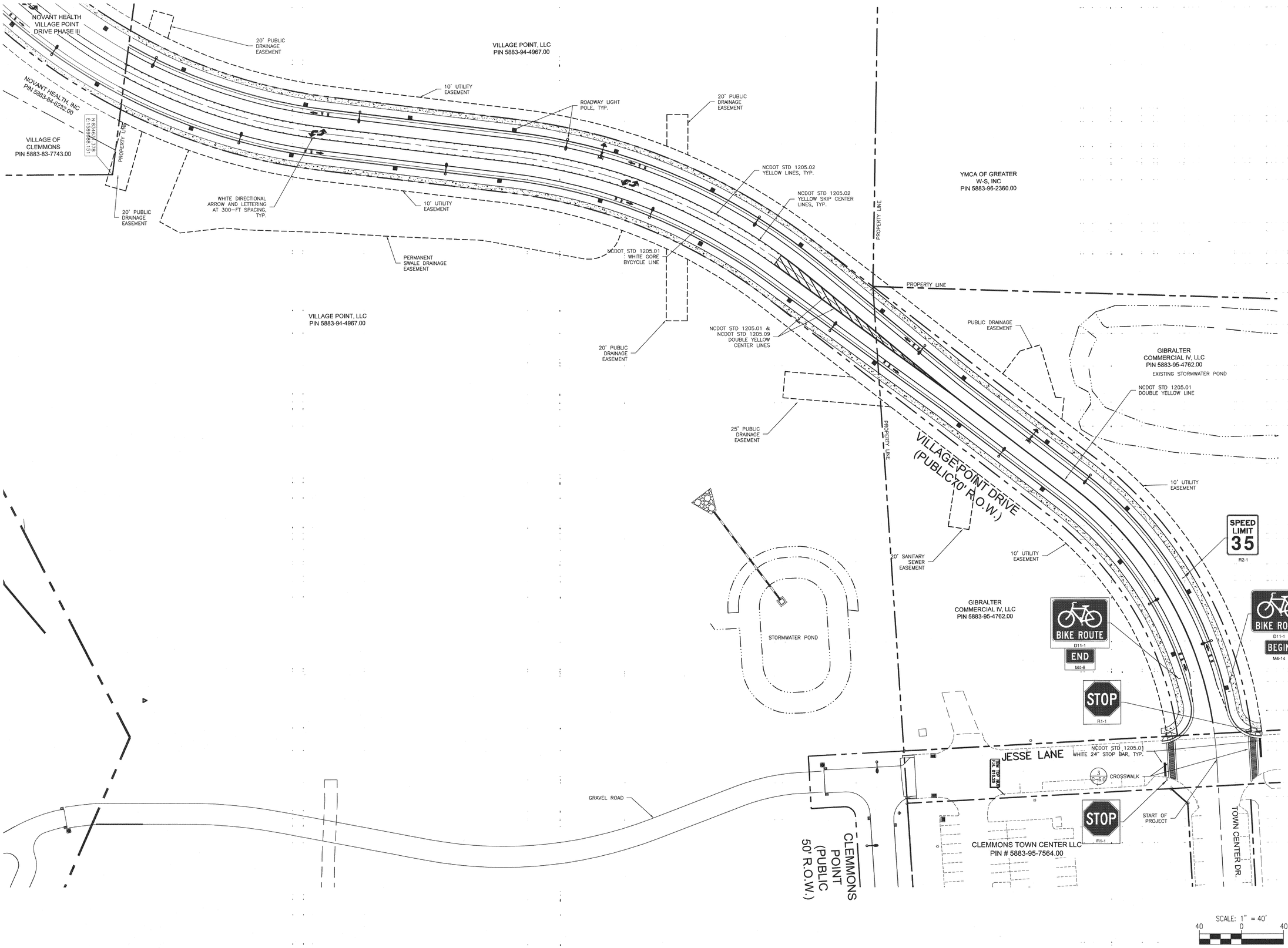

Stimmel

Stimmel Associates, PA
Landscape Architecture
Civil Engineering
Land Planning

601 N. Trade Street Suite 200
Winston Salem, NC 27101-2916
P: 336.723.1067 F: 336.723.1069

SEALS:

NCBEES CERT. NO.: C-1347

NORTH CAROLINA PROFESSIONAL ENGINEER SEAL 027912 2/8/16 KELWAY L. HOWARD III

PROJECT:

VILLAGE POINT
VILLAGE POINT DRIVE PHASE IV
CLEMMONS, NORTH CAROLINA

CLIENT:

THE VILLAGE OF
CLEMMONS
3715 CLEMMONS ROAD
CLEMMONS, NC 27012
336-766-7511

DRAWN:	JNG
DATE:	10/30/2015

REVISIONS:
1 2/8/16 Comments

JOB. NO: 15-077

SHEET TITLE:
STRIPING
AND
SIGNAGE
PLAN

SCALE:

SHEET NO.:
C-2.0

© STIMMEL ASSOCIATES, P.A.

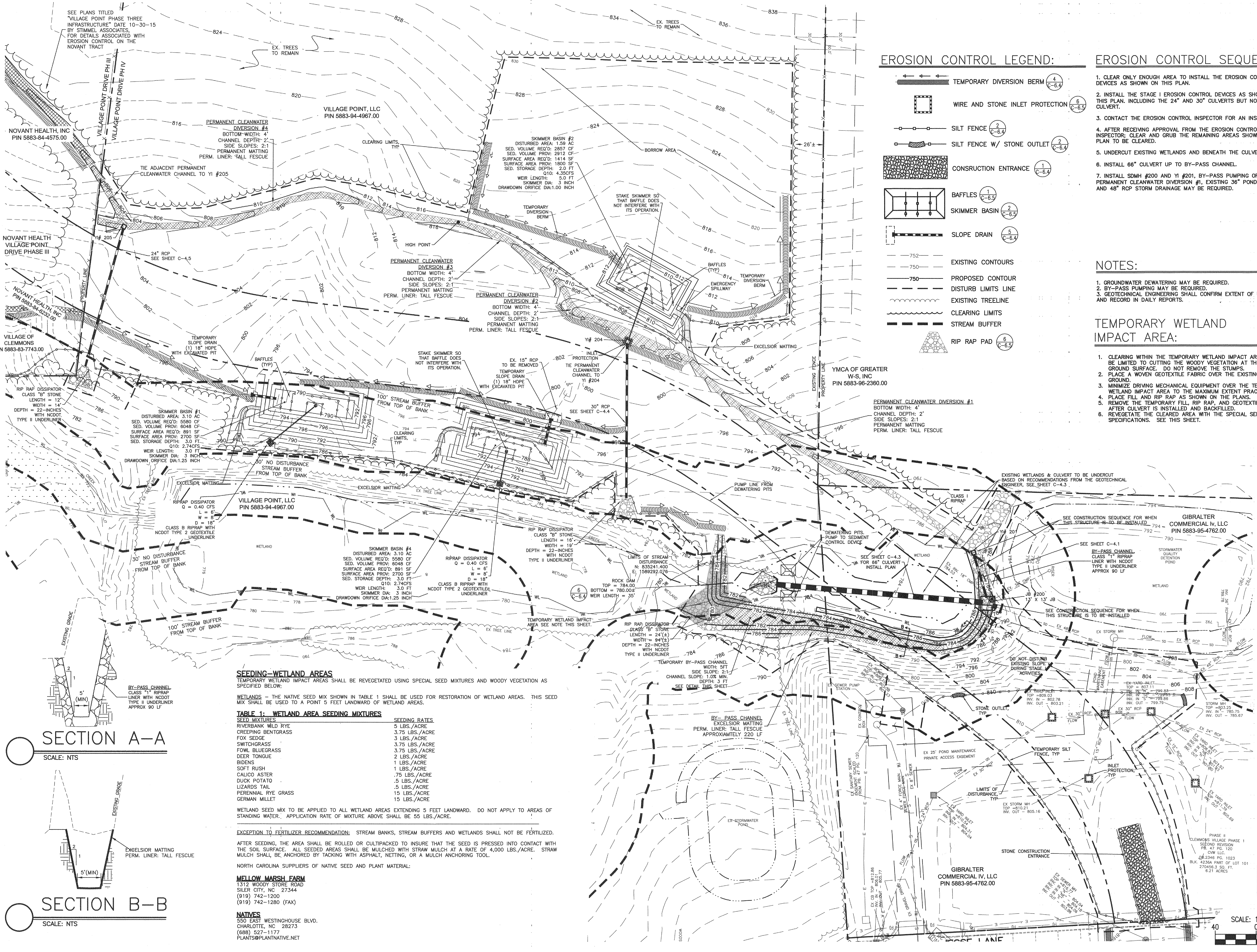

EROSION CONTROL LEGEND:

- TEMPORARY DIVERSION BERM (4 / C-6.4)
- WIRE AND STONE INLET PROTECTION (6 / C-6.5)
- SILT FENCE (2 / C-6.4)
- SILT FENCE W/ STONE OUTLET (2 / C-6.4)
- CONSRUCTION ENTRANCE (1 / C-6.4)
- BAFFLES (1 / C-6.5)
- SKIMMER BASIN (2 / C-6.5)
- SLOPE DRAIN (5 / C-6.4)
- EXISTING CONTOURS (752, 750)
- PROPOSED CONTOUR (750)
- DISTURB LIMITS LINE
- EXISTING TREELINE
- CLEARING LIMITS
- STREAM BUFFER
- RIP RAP PAD (6 / C-6.5)

EROSION CONTROL SEQUENCE:

1. CLEAR ONLY ENOUGH AREA TO INSTALL THE EROSION CONTROL DEVICES AS SHOWN ON THIS PLAN.
2. INSTALL THE STAGE I EROSION CONTROL DEVICES AS SHOWN ON THIS PLAN. INCLUDING THE 24" AND 30" CULVERTS BUT NOT THE 66" CULVERT.
3. CONTACT THE EROSION CONTROL INSPECTOR FOR AN INSPECTION.
4. AFTER RECEIVING APPROVAL FROM THE EROSION CONTROL INSPECTOR; CLEAR AND GRUB THE REMAINING AREAS SHOWN ON THIS PLAN TO BE CLEARED.
5. UNDERCUT EXISTING WETLANDS AND BENEATH THE CULVERT.
6. INSTALL 66" CULVERT UP TO BY-PASS CHANNEL.
7. INSTALL SDMH #200 AND YI #201, BY-PASS PUMPING OF PERMANENT CLEANWATER DIVERSION #1, EXISTING 36" POND BARREL AND 48" RCP STORM DRAINAGE MAY BE REQUIRED.

NOTES:

1. GROUNDWATER DEWATERING MAY BE REQUIRED.
2. BY-PASS PUMPING MAY BE REQUIRED.
3. GEOTECHNICAL ENGINEERING SHALL CONFIRM EXTENT OF UNDERCUT AND RECORD IN DAILY REPORTS.

TEMPORARY WETLAND IMPACT AREA:

1. CLEARING WITHIN THE TEMPORARY WETLAND IMPACT AREA SHALL BE LIMITED TO CUTTING THE WOODY VEGETATION AT THE GROUND SURFACE. DO NOT REMOVE THE STUMPS.
2. PLACE A WOVEN GEOTEXTILE FABRIC OVER THE EXISTING GROUND.
3. MINIMIZE DRIVING MECHANICAL EQUIPMENT OVER THE TEMPORARY WETLAND IMPACT AREA TO THE MAXIMUM EXTENT PRACTICABLE
4. PLACE FILL AND RIP RAP AS SHOWN ON THE PLANS.
5. REMOVE THE TEMPORARY FILL, RIP RAP, AND GEOTEXTILE FABRIC AFTER CULVERT IS INSTALLED AND BACKFILLED.
6. REVEGETATE THE CLEARED AREA WITH THE SPECIAL SEEDING SPECIFICATIONS. SEE THIS SHEET.

SEEDING-WETLAND AREAS

TEMPORARY WETLAND IMPACT AREAS SHALL BE REVEGETATED USING SPECIAL SEED MIXTURES AND WOODY VEGETATION AS SPECIFIED BELOW:

WETLANDS – THE NATIVE SEED MIX SHOWN IN TABLE 1 SHALL BE USED FOR RESTORATION OF WETLAND AREAS. THIS SEED MIX SHALL BE USED TO A POINT 5 FEET LANDWARD OF WETLAND AREAS.

TABLE 1: WETLAND AREA SEEDING MIXTURES

SEED MIXTURES	SEEDING RATES
RIVERBANK WILD RYE	5 LBS./ACRE
CREEPING BENTGRASS	3.75 LBS./ACRE
FOX SEDGE	3 LBS./ACRE
SWITCHGRASS	3.75 LBS./ACRE
FOWL BLUEGRASS	3.75 LBS./ACRE
DEER TONGUE	2 LBS./ACRE
BIDENS	1 LBS./ACRE
SOFT RUSH	1 LBS./ACRE
CALICO ASTER	.75 LBS./ACRE
DUCK POTATO	.5 LBS./ACRE
LIZARDS TAIL	.5 LBS./ACRE
PERENNIAL RYE GRASS	15 LBS./ACRE
GERMAN MILLET	15 LBS./ACRE

WETLAND SEED MIX TO BE APPLIED TO ALL WETLAND AREAS EXTENDING 5 FEET LANDWARD. DO NOT APPLY TO AREAS OF STANDING WATER. APPLICATION RATE OF MIXTURE ABOVE SHALL BE 55 LBS./ACRE.

EXCEPTION TO FERTILIZER RECOMMENDATION: STREAM BANKS, STREAM BUFFERS AND WETLANDS SHALL NOT BE FERTILIZED.

AFTER SEEDING, THE AREA SHALL BE ROLLED OR CULTIPACKED TO INSURE THAT THE SEED IS PRESSED INTO CONTACT WITH THE SOIL SURFACE. ALL SEEDED AREAS SHALL BE MULCHED WITH STRAW MULCH AT A RATE OF 4,000 LBS./ACRE. STRAW MULCH SHALL BE ANCHORED BY TACKING WITH ASPHALT, NETTING, OR A MULCH ANCHORING TOOL.

NORTH CAROLINA SUPPLIERS OF NATIVE SEED AND PLANT MATERIAL:

MELLOW MARSH FARM
1312 WOODY STORE ROAD
SILER CITY, NC 27344
(919) 742-1200
(919) 742-1280 (FAX)

NATIVES
550 EAST WESTINGHOUSE BLVD.
CHARLOTTE, NC 28273
(688) 527-1177
PLANTS@PLANTNATIVE.NET

Stimmel
Stimmel Associates, PA
Landscape Architecture
Civil Engineering
Land Planning
601 N. Trade Street Suite 200
Winston Salem, NC 27101-2916
P: 336.723.1067 F: 336.723.1069

SEALS:

NCBEES CERT. NO.: C-1347

NORTH CAROLINA PROFESSIONAL SEAL 027912 ENGINEER KELWAY L. HOWARD III 5/11/16

PROJECT:

VILLAGE POINT
VILLAGE POINT DRIVE PHASE IV
CLEMMONS, NORTH CAROLINA

CLIENT:

THE VILLAGE OF CLEMMONS
3715 CLEMMONS ROAD
CLEMMONS, NC 27012
336-766-7511

DRAWN:	JNG
DATE:	10/30/2015
REVISIONS:	
1 2/8/16 Comments	
2 5/11/16 Matting, JB #200	
JOB. NO:	15-077

SHEET TITLE:

GRADING AND EROSION CONTROL - STAGE I

SCALE:

SHEET NO.:

C-3.0

© STIMMEL ASSOCIATES, P.A.

F:\13-234\Drawings\CD\NCDOT Redesign\13-234 C-3.0 EROSION CONTROL PLAN.dwg : C-3.0 EROSION CONTROL STAGE 1 05/16/16 1:22pm

STAGE II EROSION CONTROL SEQUENCE:

1. BEGIN GRADING AND PLACING FILL OVER 66" CULVERT.
2. BETWEEN STA 19+00 AND STA 25+50, INSTALL STORM DRAINAGE, WATER, SEWER, CURB & GUTTER, STONE BASE AND SIDEWALK. NO UTILITIES ARE ALLOWED TO BE INSTALLED BETWEEN STA. 19+00 AND STA. 15+00 UNTIL APPROVAL FROM THE GEOTECHNICAL IS RECEIVED.
3. SEED SLOPES AND OTHER AREAS AS THEY ARE BROUGHT UP TO FINISHED GRADE AND IN ACCORDANCE WITH WINSTON-SALEM STANDARDS.

Stimmel

Stimmel Associates, PA
Landscape Architecture
Civil Engineering
Land Planning

601 N. Trade Street Suite 200
Winston Salem, NC 27101-2916
P: 336.723.1067 F: 336.723.1069

SEALS:

NCBEES CERT. NO.: C-1347

NORTH CAROLINA PROFESSIONAL ENGINEER SEAL 027912 5/11/16 KELLY L. HOWARD III

PROJECT:

VILLAGE POINT
VILLAGE POINT DRIVE PHASE IV
CLEMMONS, NORTH CAROLINA

CLIENT:

THE VILLAGE OF
CLEMMONS
3715 CLEMMONS ROAD
CLEMMONS, NC 27012
336-766-7511

DRAWN:	JNG
DATE:	10/30/2015
REVISIONS:	
1 2/8/16 Comments	
2 5/11/16 JB #200	
JOB. NO:	15-077

SHEET TITLE:

GRADING AND EROSION CONTROL - STAGE II

SCALE:

SHEET NO.:

C-3.1

© STIMMEL ASSOCIATES, P.A.

F:\13-234\Drawings\CD\NCDOT Redesign\13-234 C-3.1 EROSION CONTROL PLAN STG II.dwg - C-3.1 STAGE 2 05/16/16 1:17pm

STAGE III EROSION CONTROL SEQUENCE:

1. INSTALL REMAINING ROADWAY STORM, WATER, CURB & GUTTER AND STONE BASE.
2. COMPLETE THE SIDEWALKS AND LANDSCAPING.
3. SEE ALL DISTURBED AREAS, PROVIDING A FIRM STAND OF GRASS.
4. SEE SHEET C-5.0 FOR A SEPARATE CONSTRUCTION SEQUENCE FOR THE BIORETENSION CELL.
5. CONTACT THE EROSION CONTROL INSPECTOR FOR A FINAL INSPECTION.
6. REMOVE ALL EROSION CONTROL DEVICES UPON RECEIVING APPROVAL FROM THE EROSION CONTROL INSPECTOR.
7. SEED ALL REMAINING DISTURBED AREAS.

NOVANT HEALTH, INC
PIN 5883-84-4575.00

VILLAGE POINT DRIVE PH III

VILLAGE POINT DRIVE PH IV

PROPERTY LINE

EX. TREES TO REMAIN

VILLAGE POINT, LLC
PIN 5883-94-4967.00

PERMANENT CLEANWATER DIVERSION #4

CLEARING LIMITS, TYP

LIMITS OF DISTURBANCE

BORROW AREA

26'±

TIE ADJACENT PERMANENT CLEANWATER CHANNEL TO YI #205

CLEARING LIMITS

SKIMMER BASIN #2

PERMANENT CLEANWATER DIVERSION #2

TEMPORARY DIVERION BERM

STAKE SKIMMER SO THAT BAFFLE DOES NOT INTERFERE WITH ITS OPERATION.

NOVANT HEALTH VILLAGE POINT DRIVE PHASE III

YI# 205

74" RCP SEE SHEET C-4.4

INLET PROTECTION, TYP

CI# 110

YI# 109

PERMANENT CLEANWATER DIVERSION #3

BAFFLES (TYP)

TEMPORARY DIVERION BERM

LIMITS OF DISTURBANCE

CLEARING LIMITS

NOVANT HEALTH, INC
PIN 5883-84-0432.00

25+00

24+00

23+00

CI# 106

22+00

CI# 105

CI# 111

21+00

CI# 101

YI# 204

TIE PERMANENT CLEANWATER CHANNEL TO YI #204

30" RCP SEE SHEET C-4.4

YMCA OF GREATER W-S, INC
PIN 5883-96-2360.00

EXISTING FENCE PROPERTY LINE

PERMANENT CLEANWATER DIVERSION #1

VILLAGE OF CLEMMONS
PIN 5883-83-7743.00

CLEARING LIMITS

RIP RAP DISSIPATOR

100' STREAM BUFFER FROM TOP OF BANK

TEMPORARY SILT FENCE, TYP

STONE OUTLET, TYP

CI# 112

CI# 103

CI# 102

VILLAGE POINT, LLC
PIN 5883-94-4967.00

NCDOT STORMWATER SWALE
DRAINAGE AREA 3.10 AC
LENGTH 380 LF
BOTTOM WIDTH 6'
CHANNEL DEPTH 1.5'
CHANNEL SLOPE 0.3%
SIDE SLOPES 3:1
EXCELSIOR MATTING
PERM LINER TALL FESCUE

EX TREE LINE

30' NO DISTURBANCE STREAM BUFFER FROM TOP OF BANK

CLEARING LIMITS, TYP

LIMITS OF DISTURBANCE, TYP

RIP RAP DISSIPATOR

WETLAND

STONE OUTLET, TYP

PLUNGE POOL SEE SHEET C-4.3

CLASS I RIPRAP

GIBRALTER COMMERCIAL IV, LLC
PIN 5883-95-4762.00

STORM WATER QUALITY DETENTION POND

WETLAND

JB #200
13' X 13' JB

EX 48" RCP

EX STORM MH

EX 36" RCP

CI# 113

CI# 104

SEWER PUMP STATION

EX CONTROL BOX

EX-YARD INLET
TOP = 807.11
INV. IN "N" = 799.83
INV. IN "S" = 799.95
INV. IN "E" = 799.68
INV. OUT = 799.79

EX 30" RCP

STORM MH
TOP =803.25
INV. IN = 785.75
INV. OUT = 785.67

SDMH# 300

EX 24" RCP

EX 18" RCP

EX 25' POND MAINTENANCE PRIVATE ACCESS EASEMENT

EX. SANITARY SEWER EASEMENT 20' WIDE PVC

EX 4" FORCE MAIN PVC

EX 8" SEWER

EX STORM MH
TOP =810.21
INV. OUT = 805.16

EX-YARD INLET
TOP = 807.11
INV. OUT = 803.69

PHASE II
CLEMMONS VILLAGE PHASE 1
SECOND REVISION
PB. 47 PG. 120
CVW LLC.
DB 2346 PG. 1023
BLK. 4236A PART OF LOT 101
270456.3 SQ. FT.
6.21 ACRES

GIBRALTER COMMERCIAL IV, LLC
PIN 5883-95-4762.00

EX GRAVEL DRIVE

EX SEWER MH
TOP =812.86
INV. IN = 804.74
INV. IN = 804.06
INV. OUT = 804.06

EX CB TOP =812.86
INV. IN = 805.77
INV. OUT = 805.77

EX STORMWATER POND

ASPHALT C

EX 25' PUBLIC

EDGE LANE

North

SCALE: 1" = 40'

40 0 40

F:\13-234\Drawings\CD\NCDOT Redesign\13-234 C-3.2 EROSION CONTROL PLAN STG III.dwg : C-3.2 STAGE 3 05/16/16 1:31pm

Stimmel

Stimmel Associates, PA
Landscape Architecture
Civil Engineering
Land Planning

601 N. Trade Street Suite 200
Winston Salem, NC 27101-2916
P: 336.723.1067 F: 336.723.1069

SEALS:

NCBEES CERT. NO.: C-1347

NORTH CAROLINA PROFESSIONAL ENGINEER SEAL 027912 KENNETH L. HOWARD III

PROJECT:

VILLAGE POINT
VILLAGE POINT DRIVE PHASE IV
CLEMMONS, NORTH CAROLINA

CLIENT:

THE VILLAGE OF CLEMMONS
3715 CLEMMONS ROAD
CLEMMONS, NC 27012
336-766-7511

DRAWN:	JNG
DATE:	10/30/2015

REVISIONS:
1. 2/8/16 Comments
2. 5/11/16 JB #200

JOB. NO: 15-077

SHEET TITLE:
GRADING AND EROSION CONTROL - STAGE III

SCALE:

SHEET NO.:
C-3.2

© STIMMEL ASSOCIATES, P.A.

EROSION CONTROL NOTES:

1. SITE DISTURBED AREA = 7.20 ACRES +/-
2. CLEARING LIMITS SHALL BE CLEARLY DEFINED PRIOR TO BEGINNING CLEARING OPERATIONS. CLEARING DEBRIS SHALL BE PROPERLY DISPOSED OF OFFSITE IN A PERMITTED LANDFILL FACILITY. TREES OUTSIDE THE CLEARING LIMITS SHALL BE PROTECTED DURING CONSTRUCTION.
3. THE EROSION AND SEDIMENTATION CONTROL PLAN IS INTENDED AS A GUIDE. AFTER GRADING BEGINS, ADDITIONAL MEASURES MAY BE NECESSARY TO CONTROL SEDIMENTATION AND EROSION ONSITE. IF SO, ADDITIONAL MEASURES SHALL BE INSTALLED AS DIRECTED BY THE NCDENR, LAND QUALITY SECTION INSPECTOR.
4. ALL SLOPE SURFACES SHALL BE ROUGHENED USING TRACKED EQUIPMENT TO MINIMIZE EROSION UNTIL SEEDING IS DONE.
5. INSPECT AND REPAIR ALL EROSION CONTROL DEVICES ON A WEEKLY BASIS AND INSPECT AND REPAIR IMMEDIATELY FOLLOWING ANY RAINFALL.
6. CONTRACTOR RESPONSIBLE FOR ALL EROSION CONTROL PRACTICES REQUIRED TO MINIMIZE EFFECTS ON ADJACENT PROPERTIES DURING CONSTRUCTION. EROSION CONTROL PRACTICES SHALL BE CONTINUED IN ACCORDANCE WITH DETAILS AND ARE TO BE MAINTAINED UNTIL CONTRIBUTING AREAS ARE STABLE.
7. CONTRACTOR SHALL BE RESPONSIBLE FOR FOLLOWING THE EROSION CONTROL SEQUENCE.
8. ANY BORROW WILL COME FROM A SITE OR SPOIL WILL BE PLACED ON A SITE APPROVED BY THE PROPER JURISDICTION HAVING APPROVAL AUTHORITY OVER THE SITE.
9. ALL STOCKPILE AREAS ARE INTENDED TO DRAIN TO AN APPROVED SEDIMENT TRAPPING DEVICE AND SHALL BE WITHIN THE LIMITS OF THE DISTURBED AREA SHOWN.
10. ALL DISTURBED AREAS NOT OTHERWISE DELINEATED FOR BUILDING, PAVING, SOD, STONE, OR RIPRAP SHALL BE PERMANENTLY SEEDED IN ACCORDANCE WITH PERMANENT SEEDING SPECIFICATIONS SHOWN ON THE PLANS.
11. ALL CUT AND FILL SLOPES IN EXCESS OF THREE (3) TO ONE (3:1) AND GREATER THAN TEN (10) FEET IN HEIGHT AND INTERVENING TERRACES REQUIRED IN SECTION 5-7.2 SHALL BE REVEGETATED TO PROVIDE PLANT COVER OVER THE ENTIRE AREA. SAID REVEGETATION SHALL INCLUDE A MINIMUM OF ONE TREE PER TWO HUNDRED (200) SQUARE FEET OF SURFACE AREA. THE TRUNK OF ANY REQUIRED TREE SHALL BE NO CLOSER THAN TEN (10) FEET FROM ANY OTHER REQUIRED TREE. SAID TREES MAY BE A MIXTURE OF EVERGREEN AND DECIDUOUS, A MINIMUM OF TWELVE (12) INCHES HIGH AT PLANTING WITH A MINIMUM HEIGHT AT MATURITY OF TWENTY-FIVE (25) FEET.
12. IF SPOIL/WASTE MATERIAL WILL BE HAULED OFF-SITE OR IF BORROW/FILL MATERIAL WILL BE BROUGHT ON-SITE, IT MUST COME FROM A PERMITTED SITE OR BE INCLUDED IN THE EROSION CONTROL PLAN.

EROSION CONTROL DEVICE MAINTENANCE SCHEDULE:

1. INSPECT ALL SEDIMENTATION AND EROSION CONTROL DEVICES FOR STABILITY AND FUNCTION EACH WEEK AND FOLLOWING EACH RAINFALL EVENT.
2. REMOVE SILT/SEDIMENT FROM TEMPORARY DEVICES WHEN ACCUMULATED VOLUME HAS REACHED 50% CAPACITY.
3. REMOVE ACCUMULATED SILT/SEDIMENT FROM BEHIND SEDIMENT FENCE WHEN DEPTH EXCEEDS APPROXIMATELY 0.5'. REPAIR AND REPLACE SILT FENCE AS NECESSARY.
4. SEED AND STABILIZE TEMPORARY DIVERSION BERMS IMMEDIATELY AFTER CONSTRUCTION INCLUDING "CLEAN" WATER DIVERSION BERMS. RE-GRADE/REPAIR BERMS AS REQUIRED.
5. CONTRACTOR SHALL APPOINT AN ON-SITE INSPECTOR AND MAINTAIN RECORDS OF INSPECTIONS IN ACCORDANCE WITH THE PROVISIONS OF THE GENERAL NPDES STORMWATER DISCHARGE PERMIT FOR CONSTRUCTION ACTIVITIES.

TEMPORARY GRAVEL CONSTRUCTION ENTRANCE
MAINTAIN THE GRAVEL PAD IN A CONDITION TO PREVENT MUD OR SEDIMENT FROM LEAVING THE CONSTRUCTION SITE. THIS MAY REQUIRE PERIODIC TOPDRESSING WITH 2-INCH STONE. AFTER EACH RAINFALL, INSPECT ANY STRUCTURE USED TO TRAP SEDIMENT AND CLEAN IT OUT AS NECESSARY. IMMEDIATELY REMOVE ALL OBJECTIONABLE MATERIALS SPILLED, WASHED, OR TRACKED ONTO PUBLIC ROADWAYS.

TEMPORARY SEEDING
RESEED AND MULCH AREAS WHERE SEEDLING EMERGENCE IS POOR, OR WHERE EROSION OCCURS, AS SOON AS POSSIBLE. DO NOT MOW. PROTECT FROM TRAFFIC AS MUCH AS POSSIBLE.

TEMPORARY DIVERSIONS
INSPECT TEMPORARY DIVERSIONS ONCE A WEEK AND AFTER EVERY RAINFALL. IMMEDIATELY REMOVE SEDIMENT FROM THE FLOW AREA AND REPAIR THE DIVERSION RIDGE. CAREFULLY CHECK OUTLETS AND MAKE TIMELY REPAIRS AS NEEDED. WHEN THE AREA PROTECTED IS PERMANENTLY STABILIZED, REMOVE THE RIDGE AND THE CHANNEL TO BLEND WITH THE NATURAL GROUND LEVEL AND APPROPRIATELY STABILIZE IT.

SILT FENCE
INSPECT SEDIMENT FENCES AT LEAST ONCE A WEEK AND AFTER EACH RAINFALL. MAKE ANY REQUIRED REPAIRS IMMEDIATELY. SHOULD THE FABRIC OF A SEDIMENT FENCE COLLAPSE, TEAR, DECOMPOSE OR BECOME INEFFECTIVE, REPLACE IT PROMPTLY. REPLACE BURLAP EVERY 60 DAYS. REMOVE SEDIMENT DEPOSITS AS NECESSARY TO PROVIDE ADEQUATE STORAGE VOLUME FOR THE NEXT RAIN AND TO REDUCE PRESSURE ON THE FENCE. TAKE CARE TO AVOID UNDERMINING THE FENCE DURING CLEANOUT. REMOVE ALL FENCING MATERIALS AND UNSTABLE SEDIMENT DEPOSITS AND BRING THE AREA TO GRADE AND STABILIZE IT AFTER THE CONTRIBUTING DRAINAGE AREA HAS BEEN PROPERLY STABILIZED.

PERMANENT GROUND COVER
THE OWNER OR RESPONSIBLE PARTY IS RESPONSIBLE FOR THE LONG-TERM MAINTENANCE OF THE GROUNDCOVER ON THE PROPERTY. GROUNDCOVER MUST BE MAINTAINED TO A DEGREE THAT PREVENTS SOIL EROSION AND SEDIMENTATION AT ALL TIMES. THE CITY OF GREENSBORO HAS THE AUTHORITY TO REQUIRE CHANGES IN THE OWNER'S GROUNDCOVER MAINTENANCE PLAN IN ORDER TO STOP SOIL EROSION AND SEDIMENTATION AT ANY TIME.

TEMPORARY SEEDING

FOR LATE WINTER/EARLY SPRING:
SEEDING MIXTURE

SPECIES:	RATE (LB/ACRE):
RYE (GRAIN)	120
ANNUAL LESPEDEZA (KOBE IN PIEDMONT & COASTAL PLAIN, KOREAN IN MOUNTAINS)	50

SEEDING DATES
MOUNTAINS--FEB. 1 - MAY 1
PIEDMONT--JAN. 1 - MAY 1
COASTAL PLAIN--DEC. 1 - APR. 15
SOIL AMENDMENTS
FOLLOW RECOMMENDATIONS OF SOIL TESTS OR APPLY 2,000 LB/ACRE GROUND AGRICULTURAL LIMESTONE AND 750 LB/ACRE 10-10-10 FERTILIZER.
MULCH
APPLY 4,000 LB/ACRE STRAW. ANCHOR STRAW BY TACKING WITH ASPHALT, NETTING, OR A MULCH ANCHORING TOOL. A DISK WITH BLADES SET NEARLY STRAIGHT CAN BE USED AS A MULCH ANCHORING TOOL.
MAINTENANCE
REFERTILIZE IF GROWTH IS NOT FULLY ADEQUATE. RESEED, REFERTILIZE AND MULCH IMMEDIATELY FOLLOWING EROSION OR OTHER DAMAGE.

FOR SUMMER:
SEEDING MIXTURE

SPECIES:	RATE (LB/ACRE):
GERMAN MILLET	40

IN THE PIEDMONT AND MOUNTAINS, A SMALL-STEMMED SUDAN GRASS MAY BE SUBSTITUTED AT A RATE OF 50 LB/ACRE.
SEEDING DATES
MOUNTAINS--MAY 15 - AUG. 15
PIEDMONT--MAY 1 - AUG. 15
COASTAL PLAIN--APR. 15 - AUG. 15
SOIL AMENDMENTS
FOLLOW RECOMMENDATIONS OF SOIL TESTS OR APPLY 2,000 LB/ACRE GROUND AGRICULTURAL LIMESTONE AND 750 LB/ACRE 10-10-10 FERTILIZER.
MULCH
APPLY 4,000 LB/ACRE STRAW. ANCHOR STRAW BY TACKING WITH ASPHALT, NETTING, OR A MULCH ANCHORING TOOL. A DISK WITH BLADES SET NEARLY STRAIGHT CAN BE USED AS A MULCH ANCHORING TOOL.
MAINTENANCE
REFERTILIZE IF GROWTH IS NOT FULLY ADEQUATE. RESEED, REFERTILIZE AND MULCH IMMEDIATELY FOLLOWING EROSION OR OTHER DAMAGE.

FOR FALL:
SEEDING MIXTURE

SPECIES:	RATE (LB/ACRE):
RYE (GRAIN)	120

SEEDING DATES
MOUNTAINS--AUG. 15 - DEC. 15
PIEDMONT AND COASTAL PLAIN--AUG. 15 - DEC. 30
SOIL AMENDMENTS
FOLLOW RECOMMENDATIONS OF SOIL TESTS OR APPLY 2,000 LB/ACRE GROUND AGRICULTURAL LIMESTONE AND 1,000 LB/ACRE 10-10-10 FERTILIZER.
MULCH
APPLY 4,000 LB/ACRE STRAW. ANCHOR STRAW BY TACKING WITH ASPHALT, NETTING, OR A MULCH ANCHORING TOOL. A DISK WITH BLADES SET NEARLY STRAIGHT CAN BE USED AS A MULCH ANCHORING TOOL.
MAINTENANCE
REPAIR AND REFERTILIZE DAMAGED AREAS IMMEDIATELY. TOPDRESS WITH 50 LB/ACRE OF NITROGEN IN MARCH. IF IT IS NECESSARY TO EXTEND TEMPORARY COVER BEYOND JUNE 15, OVERSEED WITH 50 LB/ACRE KOBE (PIEDMONT AND COASTAL PLAIN) OR KOREAN (MOUNTAINS) LESPEDEZA IN LATE FEBRUARY OR EARLY MARCH.

SEEDBED PREPARATION:
1. RIP AREA TO BE SEEDED TO A MINIMUM DEPTH OF 4-6 INCHES.
2. REMOVE ALL LOOSE ROCKS, ROOTS, ETC. LEAVING SURFACE SMOOTH AND UNIFORM.
3. APPLY SEED, AGRICULTURAL LIME, FERTILIZER AND SUPER PHOSPHATE UNIFORMLY AND MIX WITH THE SOIL.
4. SEED ON A FRESHLY PREPARED SEEDBED AND COVER THE SEED LIGHTLY WITH SEEDING EQUIPMENT OR CULTIPACK AFTER SEEDING.
5. MULCH IMMEDIATELY AFTER SEEDING AND ANCHOR MULCH.

PERMANENT SEEDING

ALL UNPAVED DISTURBED AREAS (OR LAWN TO BE REESTABLISHED) OUTSIDE PLANTING BED TO BE SEEDED WITH AN EVEN MIXTURE OF REBEL II, FALCON AND JAGUAR FINE FESCUES, OR APPROVED EQUAL, AT A RATE OF 5-6 LBS./1,000 S.F. SO AS TO PRODUCE A THICK, FIRM STAND OF GRASS. FERTILIZE AT A RATE OF 10 LBS./1,000 S.F. WITH 10-10-10 SLOW-RELEASE FERTILIZER (USE STRAW AND ASPHALT EMULSION TO COVER SEED UNTIL STABLE). APPLY LIME ACCORDING TO SOIL TEST, OR APPLY 4,000 LBS./ACRE SLOW-RELEASE PELLETIZED AGRICULTURAL LIMESTONE.

SEEDING DATES
AUG. 20 - OCT. 25 & FEB. 1 - MAY 1

IF THE PROJECT COMPLETION DATE FALLS OUTSIDE OF AUG 20 - OCT 25 AND FEB 1ST - MAY 1ST THEN THE CONTRACTOR SHALL RESEED THE ENTIRE PROJECT WITHIN THE DATES GIVEN ABOVE.

GROUND STABILIZATION CRITERIA:

SITE AREA DESCRIPTION	STABILIZATION TIMEFRAME	STABILIZATION TIMEFRAME EXCEPTIONS
Perimeter dikes, swales, ditches, & slopes	7 days	None
Slopes steeper than 3:1	7 days	If slopes are 10' or less in length & are not steeper than 2:1, 14 days allowed
Slopes 3:1 or flatter	14 days	7 days for slopes > 50 feet in length
All other areas with slopes flatter than 4:1	14 days	None

SELF INSPECTION REQUIREMENTS:

THIS PROJECT IS SUBJECT TO THE REQUIREMENTS OUTLINED IN NORTH CAROLINA GENERAL STATUTE 113A-54.1(E) AND IN THE NC ADMINISTRATIVE CODE 15A NCAC 04B .0131, SELF-INSPECTIONS.

THE SELF-INSPECTION PROGRAM IS SEPARATE FROM THE WEEKLY SELF-MONITORING PROGRAM OF THE NPDES STORMWATER PERMIT FOR CONSTRUCTION ACTIVITIES. THE FOCUS OF THE SELF-INSPECTION REPORT IS THE INSTALLATION AND MAINTENANCE OF EROSION AND SEDIMENTATION CONTROL MEASURES ACCORDING TO THE APPROVED PLAN. THE INSPECTIONS SHOULD BE CONDUCTED AFTER EACH PHASE OF THE PROJECT, AND CONTINUED UNTIL PERMANENT GROUND COVER IS ESTABLISHED.

THE CONTRACTOR SHALL PERFORM THE REQUIRED SELF INSPECTIONS AT THE COMPLETION OF EACH PHASE OF CONSTRUCTION AND COMPLETE THE STANDARD NCDENR SELF INSPECTION FORMS INCLUDED IN THE GRADING PERMIT APPROVAL. THE PHASES ARE AS FOLLOWS:

1. INSTALLATION OF PERIMETER EROSION AND SEDIMENT CONTROL MEASURES.
2. CLEARING AND GRUBBING OF EXISTING GROUND COVER.
3. COMPLETION OF ANY PHASE OF ANY PHASE OF GRADING OF SLOPES OR FILLS.
4. INSTALLATION OF STORM DRAINAGE FACILITIES.
5. COMPLETION OF CONSTRUCTION OR DEVELOPMENT.
6. ESTABLISHMENT OF PERMANENT GROUND COVER SUFFICIENT TO RESTRAIN EROSION.

THE INSPECTION SHALL VERIFY THAT ALL OF THE INSTALLED EROSION AND SEDIMENTATION CONTROL MEASURES, PRACTICES AND DEVICES ARE CONSISTENT WITH THE APPROVED EROSION AND SEDIMENTATION CONTROL PLAN AND ALL PREVIOUSLY CONSTRUCTED EROSION CONTROL MEASURES HAVE BEEN MAINTAINED IN ACCORDANCE WITH THE MAINTENANCE SCHEDULE.

IF ANY SIGNIFICANT DEVIATIONS FROM THE APPROVED EROSION AND SEDIMENTATION CONTROL PLAN ARE FOUND, THEN THE CONTRACTOR SHALL TAKE THE NECESSARY CORRECTIVE ACTIONS TO CORRECT THE DEVIATIONS. A SIGNIFICANT DEVIATION MEANS AN OMISSION, ALTERATION OR RELOCATION OF AN EROSION OR SEDIMENTATION CONTROL MEASURE THAT PREVENTS THE MEASURE FROM PERPORMING AS INTENDED.

NPDES STORMWATER NOTE:

THIS PROJECT IS SUBJECT TO THE REQUIREMENTS OUTLINED IN NORTH CAROLINA GENERAL STATUTE 143-215.1 GENERAL STORMWATER PERMIT

THIS GENERAL PERMIT IS APPLICABLE TO POINT SOURCE DISCHARGES OF STORMWATER FROM CONSTRUCTION ACTIVITIES DISTURBING ONE OR MORE ACRES OF LAND. THE SUBMISSION OF A PROPOSED EROSION AND SEDIMENTATION CONTROL PLAN TO THE DIVISION OF LAND RESOURCES OR DELEGATED LOCAL PROGRAM SHALL BE CONSIDERED TO TAKE THE PLACE OF A NOTICE OF INTENT FOR COVERAGE UNDER THIS GENERAL PERMIT FOR THOSE PROJECTS REQUIRING THIS PERMIT COVERAGE. COVERAGE UNDER THIS GENERAL PERMIT SHALL BECOME EFFECTIVE UPON ISSUANCE OF AN APPROVAL FOR THE EROSION AND SEDIMENTATION CONTROL PLAN BY THE LAND QUALITY SECTION OF THE DIVISION OF LAND RESOURCES OR DELEGATED LOCAL PROGRAM. PRIOR TO THE COMMENCEMENT OF CONSTRUCTION AND LAND DISTURBING ACTIVITIES APPROVAL OF THE EROSION AND SEDIMENTATION CONTROL PLAN SHALL BE OBTAINED.

ALL EROSION AND SEDIMENTATION CONTROL FACILITIES SHALL BE INSPECTED BY OR UNDER THE DIRECTION OF THE PERMITTEE AT LEAST ONCE EVERY SEVEN CALENDAR DAYS (AT LEAST TWICE EVERY SEVEN DAYS FOR THOSE FACILITIES DISCHARGING TO WATERS OF THE STATE LISTED ON THE LATEST EPA APPROVED 303(D) LIST FOR CONSTRUCTION RELATED INDICATORS OF IMPAIRMENT SUCH AS TURBIDITY OR SEDIMENTATION) AND WITHIN 24 HOURS AFTER ANY STORM EVENT OF GREATER THAT 0.5 INCHES OF RAIN PER 24 HOUR PERIOD. A RAIN GAUGE SHALL BE MAINTAINED ON THE SITE AND A RECORD OF THE RAINFALL AMOUNTS AND DATES SHALL BE KEPT BY THE PERMITTEE. REFER TO THE GENERAL STORMWATER PERMIT FOR A COMPLETE LIST OF INSPECTION AND REPORTING REQUIREMENTS.

A COPY OF THIS PERMIT IS ATTACHED TO THE APPROVED PERMIT OR IT CAN BE DOWNLOADED FROM NCDENR'S WEBSITE AT http://h2o.enr.state.nc.us/su/PDF_Files/SW_General_Permits/NCG010000.pdf

DUST CONTROL:

DUST CAN BE A SIGNIFICANT SOURCE OF AIR POLLUTION ON CONSTRUCTION SITES. DUST CONTROL MAY BECOME NECESSARY DURING THE PROJECT. SEVERAL METHODS ARE EFFECTIVE IN CONTROLLING DUST, HOWEVER THE MOST COMMON IS SPRINKLING ACCESS ROADS WITH WATER. ANOTHER IS USING STONE TO STABILIZE ACCESS ROADS. PROVIDE DUST CONTROL ON AN AS NEEDED BASIS.

USE OF FLOCCULANTS:

FLOCCULANTS ARE AN EFFECTIVE METHOD OF ENHANCING SETTLEMENT OF SUSPENDED SEDIMENT. 'PRODUCTS USING A CHEMICAL KNOWN AS POLYACRYLAMIDE (PAM) ARE SPECIFIED FOR THIS PROJECT. THESE PRODUCTS SHALL BE USED AND INSTALLED IN ACCORDANCE WITH THE MANUFACTURER'S RECOMMENDATIONS. THE CONTRACTOR SHALL CONFIRM WITH THE VENDOR THAT PAM'S USED ON THE SITE COMPLY WITH THE CHRONIC TOXICITY TESTING REQUIREMENTS ESTABLISHED BY THE NC DIVISION OF WATER QUALITY. DO NOT APPLY PAM'S DIRECTLY TO 'SURFACE WATERS OF THE STATE'. SURFACE WATERS OF THE STATE INCLUDE STREAMS, PONDS AND OTHER WATER FEATURES THAT ARE OUTSIDE OF THE DISTURBED LIMITS OF THE SITE.

STREET CLEANING:

ACCESS TO THIS PROJECT IS THROUGH AN ADJACENT PRIVATE DRIVE THAT SERVES AN EXISTING BUSINESS. THE PRIVATE DRIVE AND PEACE HAVEN ROAD SHALL BE KEPT CLEAN OF MUD, SEDIMENT AND OTHER CONSTRUCTION RELATED DEBRIS AT ALL TIME DURING THE CONSTRUCTION OF THIS PROJECT. THIS MAY REQUIRE STREET SWEEPING AND WASHING ROUTINE AND SHALL BE INCLUDED IN THE CONTRACTOR'S BID.

Stimmel

Stimmel Associates, PA
Landscape Architecture
Civil Engineering
Land Planning

601 N. Trade Street Suite 200
Winston Salem, NC 27101-2916
P: 336.723.1067 F: 336.723.1069

SEALS:

NCBEES CERT. NO.: C-1347

NORTH CAROLINA PROFESSIONAL ENGINEER SEAL 027912 2/8/16 ENGINEER KELWAY L. HOWARD II

PROJECT:

VILLAGE POINT
VILLAGE POINT DRIVE PHASE IV
CLEMMONS, NORTH CAROLINA

CLIENT:

THE VILLAGE OF CLEMMONS
3715 CLEMMONS ROAD
CLEMMONS, NC 27012
336-766-7511

DRAWN: JNG
DATE: 10/30/2015
REVISIONS:
1 2/8/16 Comments

JOB. NO: 15-077
SHEET TITLE:
EROSION NOTES

SCALE:
SHEET NO.:
C-3.3

© STIMMEL ASSOCIATES, P.A.

F:\13-234\Drawings\CD\NCDOT Redesign\13-234 C-3.0 EROSION CONTROL PLAN.dwg ; C-3.3 EC NOTES 02/18/16 8:23pm

LEGEND:

752	EXISTING CONTOURS @ 2' INTERVALS
750	EXISTING CONTOURS @ 10' INTERVALS
750	PROPOSED CONTOUR
	RIGHT-OF-WAY
	CENTERLINE
	FUTURE CENTERLINE
	PROPERTY BOUNDARY
	EASEMENT LINE
	EXISTING TREELINE
	CREEK / WATER SURFACE
WL	DELINEATES WETLANDS
W	EXISTING WATERLINE
W	PROPOSED WATERLINE
	EXISTING FIRE HYDRANT AND VALVE
	PROPOSED FIRE HYDRANT
	EXISTING GATE VALVE
	PROPOSED GATE VALVE
	PROPOSED 45° BEND
SS	EXISTING SANITARY SEWER LINE
SS	PROPOSED SANITARY SEWER LINE
SS	EXISTING SANITARY SEWER LINE
SS	PROPOSED SANITARY SEWER LINE
	EXISTING SANITARY SEWER MANHOLE
	PROPOSED SANITARY SEWER MANHOLE
	EXISTING STORM DRAINAGE LINE
	PROPOSED STORM DRAINAGE LINE
	EXISTING STORM DRAINAGE MANHOLE
	PROPOSED STORM DRAINAGE MANHOLE
	EXISTING CATCH BASIN
	PROPOSED CATCH BASIN
	EXISTING CURB INLET
	PROPOSED CURB INLET
	EXISTING CURB AND GUTTER
	PROPOSED CURB AND GUTTER
	INLET PROTECTION
	SILT FENCE
	TEMPORARY DIVERSION
	CLEARING LIMITS
	STREET LIGHT/OPEN TRADITION FIXTURES
	STREET LIGHT/FLAT LENS CUT OFF COBRA FIXTURE

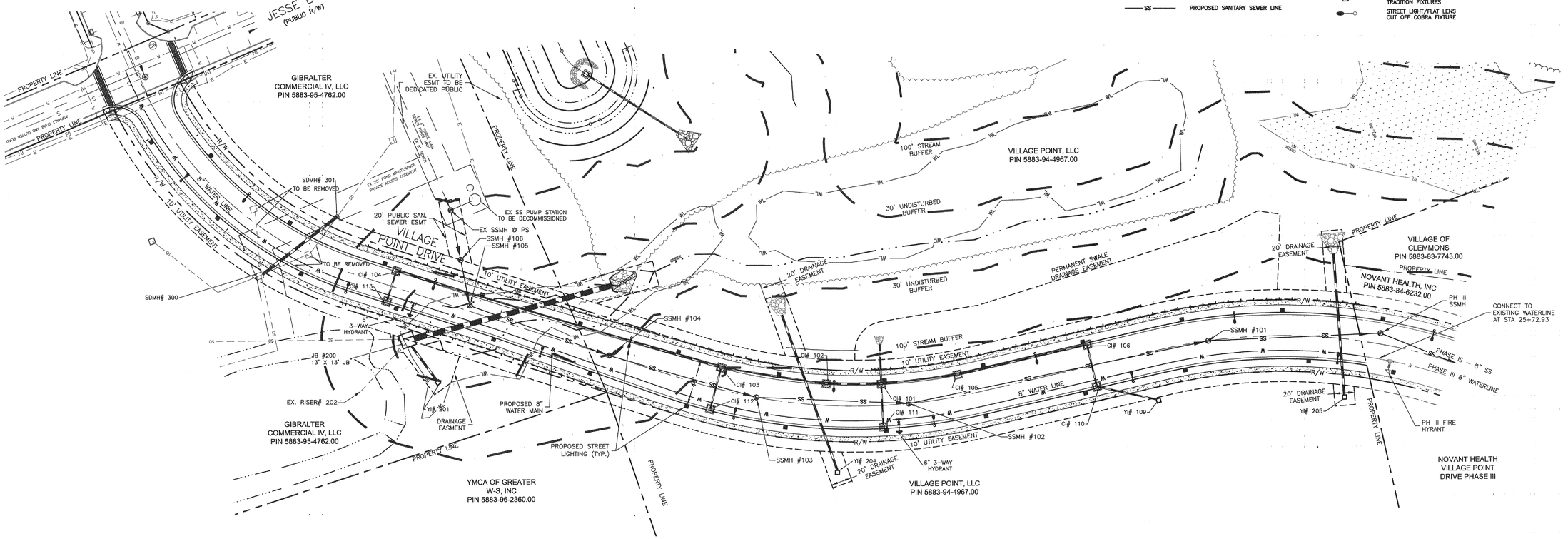

WATER AND/OR SANITARY SEWER:

1. THE MOST CURRENT EDITION OF THE THE CITY OF WINSTON-SALEM TECHNICAL SPECIFICATIONS AND DETAIL DRAWINGS FOR WATER LINE AND SANITARY SEWER LINE CONSTRUCTION WILL GOVERN ALL WATER AND SANITARY SEWER CONSTRUCTION.

2. WATER AND SEWER CONNECTIONS SHALL BE BESIDE EACH OTHER AT THE CENTER OF EACH LOT. CONNECTIONS ARE TO BE SPACED NOT MORE THAN 30' CENTER TO CENTER AND HAVE WOODEN STAKES PLACED ON EACH SIDE. STAKES SHOULD BE FLAGGED OR PAINTED FOR VISIBILITY.

3. DENSITY TESTS BY AN INDEPENDENT TESTING LAB ARE TO BE MADE AS DIRECTED BY THE CITY INSPECTOR AT THE OWNER'S EXPENSE.

FINAL INSPECTION PROCEDURE:

1. OWNER SUBMITS RECORD DRAWINGS AND ENGINEER'S CERTIFICATION TO THE ENGINEERING DIVISION'S RECORD CENTER.

2. UPON APPROVAL BY THE RECORD CENTER, OWNER MAY REQUEST FINAL INSPECTION FOR WATER AND/OR SANITARY SEWER. OWNER SHALL THEN SUBMIT THE CONSTRUCTION CHECKLIST FOR WATER AND/OR SANITARY SEWER TO THE CITY INSPECTOR.

GENERAL:

1. CONTRACTOR IS RESPONSIBLE FOR LOCATING ALL EXISTING UTILITIES PRIOR TO START OF CONSTRUCTION.

2. ALL EROSION CONTROL DEVICES SHALL BE CONSTRUCTED AND MAINTAINED IN ACCORDANCE WITH THE MOST CURRENT STANDARDS OF THE LAND QUALITY SECTION OF THE NCDENR.

3. STABILIZATION STONE UNDER PIPING TO BE PLACED AS REQUIRED BY CITY INSPECTOR WHEN CONDITIONS WARRANT.

4. AS A MINIMUM REQUIREMENT, ALL GRADED AREAS NOT UNDER PAVEMENT AND WITHIN THE RIGHT-OF-WAY AND/OR EASEMENTS SHALL BE PREPARED, FERTILIZED AND LIMED, SEEDED, AND MULCHED IMMEDIATELY UPON COMPLETION OF CONSTRUCTION AS FOLLOWS (APPLICATION RATE PER 1,000 SQUARE FEET):

TYPE I SEEDING (LAWNS OR OTHER FOCAL AREAS)

100 LBS. OF LIME
20 LBS. OF 10-20-20 OR 20 LBS. OF 10-10-10 IN COMBINATION WITH 4 LBS OF 0-46-0
5 LBS. OF TALL FESCUE, CONTAINING A BLEND OF 2 OR MORE TALL FESCUES
1 LB. OF KENBLUE OR KENTUCKY BLUEGRASS
1 LB. OF WINTER ANNUAL RYE (NOVEMBER 1 TO MARCH 1)

TYPE II SEEDING (GENERAL OR LOW MAINTENANCE AREAS)

100 LBS. OF LIME
15 LBS. OF 10-20-20 OR 15 LBS. OF 10-10-10 IN COMBINATION WITH 3 LBS. OF 0-46-0
4 LBS. OF TALL FESCUE, CONTAINING A BLEND OF 2 OR MORE TALL FESCUES
1 LB. OF SERICEA LESPEDEZA (USE UNSCARIFIED SEED AUGUST 15 TO FEBRUARY 1)
¼ LB. OF GERMAN MILLET (MAY 1 TO AUGUST 15)
1 LB. OF RYE GRAIN (PRIOR TO MAY 1 OR AFTER AUGUST 15)

SEEDING MIXTURES OTHER THAN THOSE LISTED ABOVE MUST BE APPROVED BY THE CITY INSPECTOR PRIOR TO SEEDING.

5. PRIOR TO REQUESTING A FINAL INSPECTION, THE OWNER MUST SUBMIT RECORD DRAWINGS AND ENGINEER'S CERTIFICATION TO THE ENGINEERING DIVISION'S RECORD CENTER. THE OWNER MUST ALSO SUBMIT THE CONSTRUCTION CHECKLIST TO THE CITY INSPECTOR.

6. ALL WORK MUST CARRY A ONE-YEAR WARRANTY TO COVER ALL DEFECTS IN MATERIALS AND WORKMANSHIP.

7. PRIOR TO BEGINNING ANY WORK WITHIN NCDOT RIGHT-OF-WAY, THE CONTRACTOR MUST HAVE A COPY OF THE THREE-PARTY ENCROACHMENT AGREEMENT ON THE JOB SITE.

8. PRIOR TO BEGINNING ANY WORK, THE CONTRACTOR MUST NOTIFY THE ENGINEERING FIELD OFFICE (727-2362) TO ARRANGE FOR CONSTRUCTION INSPECTION.

9. CONTACT CITY LINK AT 727-8000 FOR EXISTING WATER AND SEWER LOCATIONS.

UTILITY DESIGN APPROVED

Water & Sewer

Utilities Director _____ Date _____

Approval of these water & sanitary sewer plans does not constitute approval for construction. Approval of construction must be in formal written agreement. Failure to obtain such agreement prior to beginning of construction will relieve the City of any financial participation in this project whatsoever.

CITY OF WINSTON-SALEM

BY _____

Approval by the Utilities Director of the water and sewer infrastructure depicted in these plans does not constitute approval for any other purpose that that set forth in Section 64 of the Water System Policy and Section 36 of the Sewer System Policy of the City/County Utility Commission. To the extent other permits, licenses, permissions or the like must be obtained to complete this project, such are specifically not granted by this approval and must be obtained by the Developer and/or his designee.

50 0 50 100 150

SCALE: 1" = 50'

North

Stimmel

Stimmel Associates, PA
Landscape Architecture
Civil Engineering
Land Planning

601 N. Trade Street Suite 200
Winston Salem, NC 27101-2916
P: 336.723.1067 F: 336.723.1069

SEALS:

NCBEES CERT. NO.: C-1347

NORTH CAROLINA PROFESSIONAL ENGINEER SEAL 027912 5/11/16 KEITH WAYNE L. HOWARD III

PROJECT:

VILLAGE POINT
VILLAGE POINT DRIVE PHASE IV
CLEMMONS, NORTH CAROLINA

CLIENT:

THE VILLAGE OF CLEMMONS
3715 CLEMMONS ROAD
CLEMMONS, NC 27012
336-766-7511

DRAWN:	JNG
DATE:	10/30/2015

REVISIONS:
1 2/8/16 Comments
2 5/11/16 JB #200, Guardrail

JOB. NO: 15-077

SHEET TITLE:

OVERLALL UTILITY PLAN

SCALE:

SHEET NO.:

C-4.0

© STIMMEL ASSOCIATES, P.A.

F:\13-234\Drawings\CD\NCDOT Redesign\13-234 C-4.0 OVERALL UTIL.dwg - C-4.0 OVERALL UTILITY PLAN 05/16/16 1:41pm

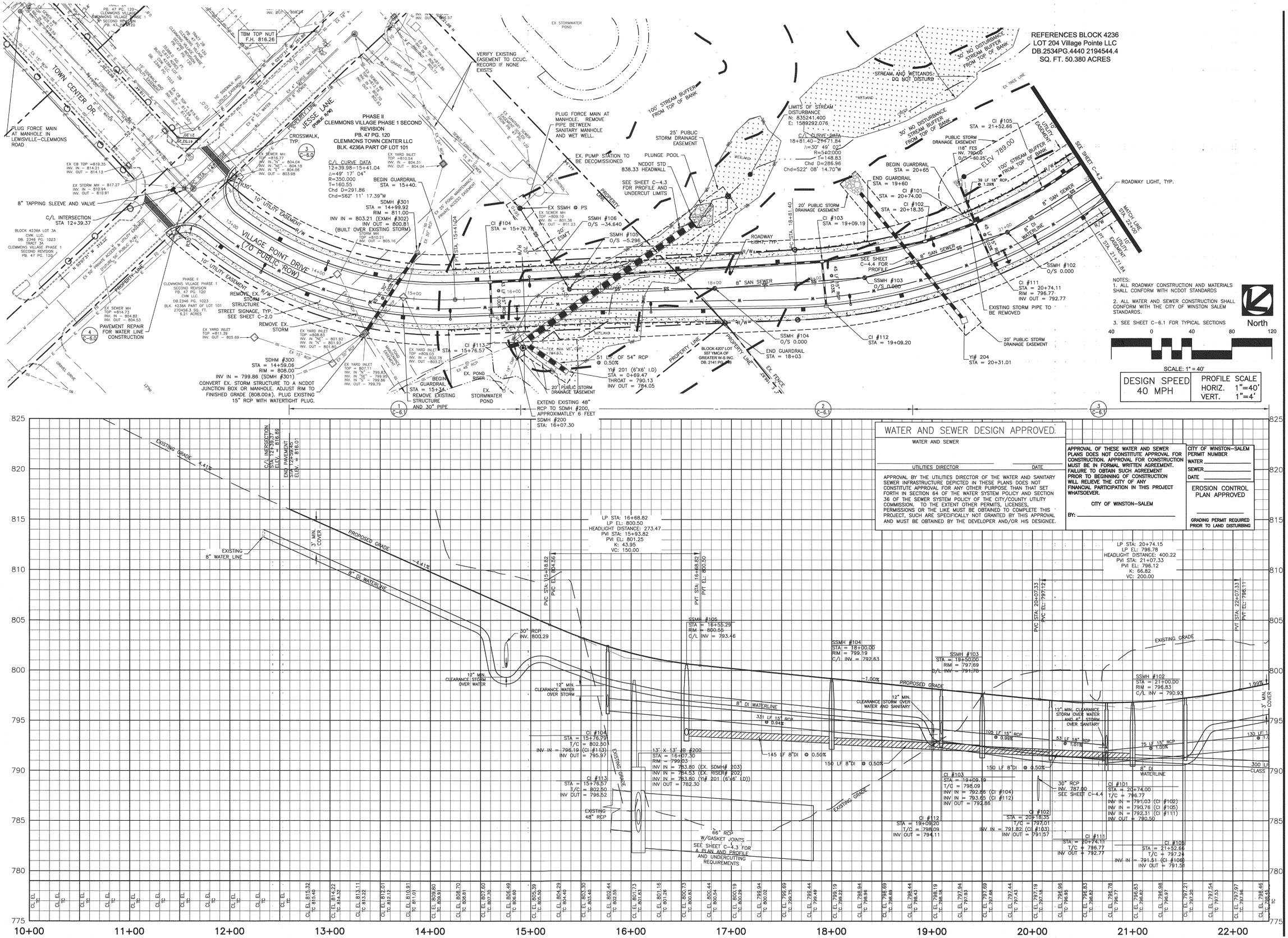

Stimmel

Stimmel Associates, PA
Landscape Architecture
Civil Engineering
Land Planning

601 N. Trade Street Suite 200
Winston Salem, NC 27101-2916
P: 336.723.1067 F: 336.723.1069

SEALS:

NCBEES CERT. NO.: C-1347

NORTH CAROLINA PROFESSIONAL ENGINEER SEAL 027912 5/11/16 KENNEY L. HOWARD III

PROJECT:

VILLAGE POINT
VILLAGE POINT DRIVE PHASE IV
CLEMMONS, NORTH CAROLINA

CLIENT:

THE VILLAGE OF CLEMMONS
3715 CLEMMONS ROAD
CLEMMONS, NC 27012
336-766-7511

DRAWN:	JNG
DATE:	10/30/2015

REVISIONS:
- 2/8/16 Comments
- 5/11/16 #200, GUARDRAIL

JOB. NO: 15-077

SHEET TITLE:
VILLAGE POINT DRIVE
STA 10+00.00
TO STA 22+00.00

SCALE:

SHEET NO.:
C-4.1

© STIMMEL ASSOCIATES, P.A.

P:\13-234\Drawings\CIVIL\NCDOT Redesign\13-234 civil.dwg - C-4.1 PLAN AND PROFILE 05/18/16 11:37am

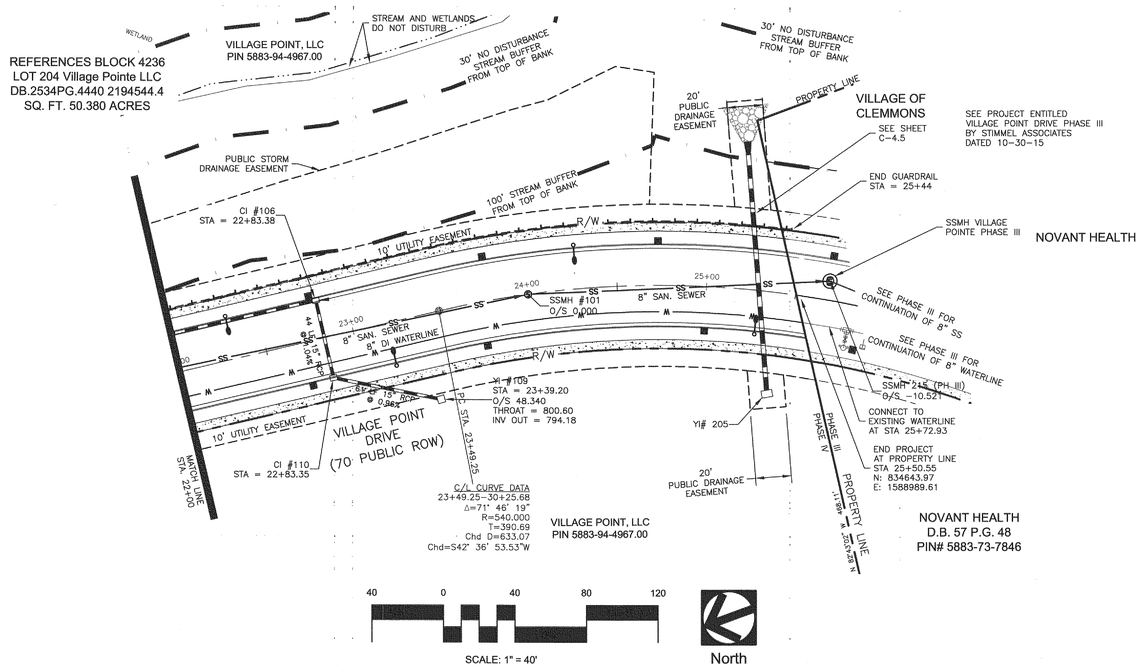

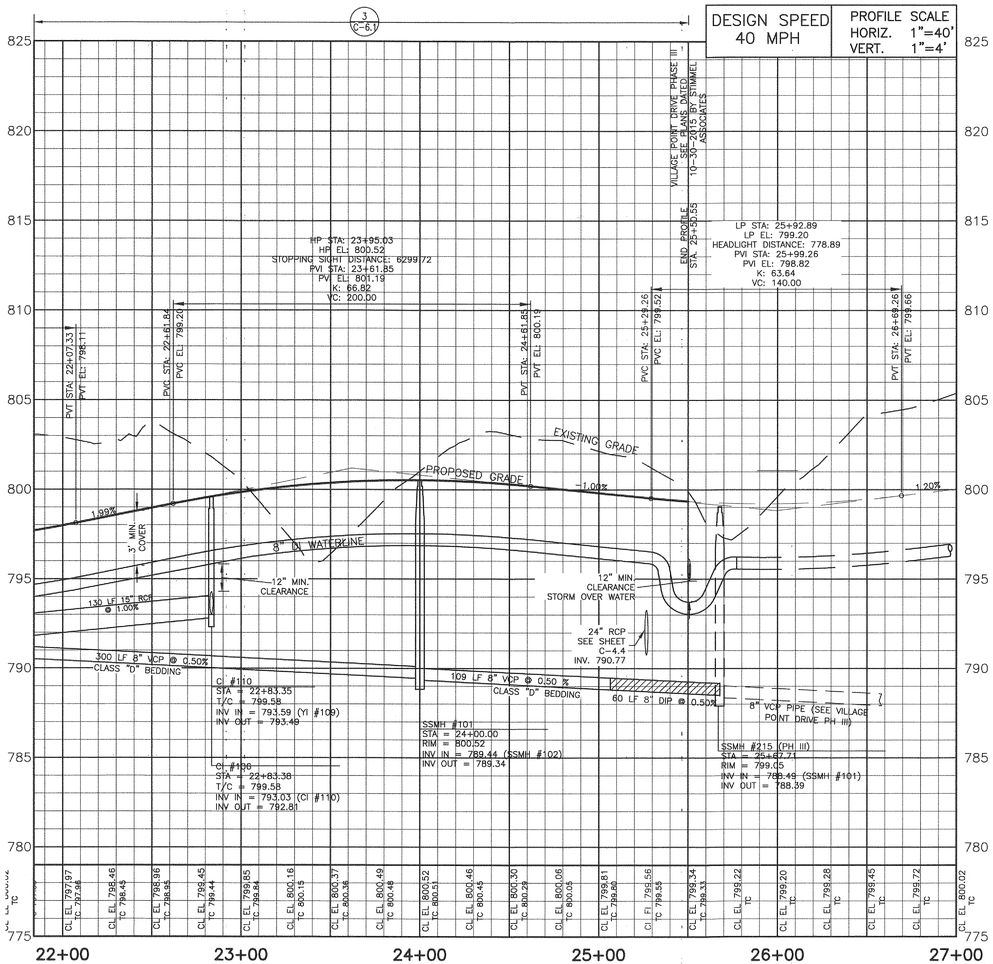

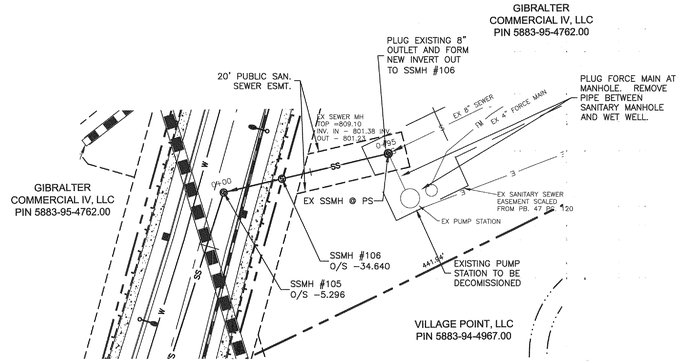

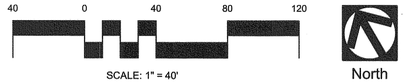

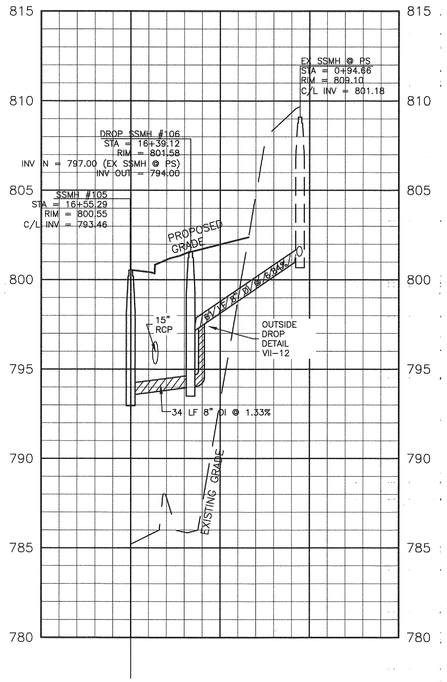

WATER AND SEWER DESIGN APPROVED
WATER AND SEWER

UTILITIES DIRECTOR _____ DATE _____

Approval by the Utilities Director of the water and sewer infrastructure depicted in these plans does not constitute approval for any other purpose that that set forth in Section 64 of the Water System Policy and Section 36 of the Sewer System Policy of the City/County Utility Commission. To the extent other permits, licenses, permissions or the like must be obtained to complete this project, such are specifically not granted by this approval and must be obtained by the Developer and/or his designee.

Approval of these water & sanitary sewer plans does not constitute approval for construction. Approval of construction must be in formal written agreement. Failure to obtain such agreement prior to beginning of construction will relieve the City of any financial participation in this project whatsoever.

CITY OF WINSTON-SALEM

BY _____

Stimmel

Stimmel Associates, PA
Landscape Architecture
Civil Engineering
Land Planning

601 N. Trade Street Suite 200
Winston Salem, NC 27101-2916
P: 336.723.1067 F: 336.723.1069

SEALS:

NCBEES CERT. NO.: C-1347
NORTH CAROLINA PROFESSIONAL ENGINEER SEAL 027912 KENNETH L. HOWARD III

PROJECT:

VILLAGE POINT
VILLAGE POINT DRIVE PHASE IV
CLEMMONS, NORTH CAROLINA

CLIENT:

THE VILLAGE OF CLEMMONS
3715 CLEMMONS ROAD
CLEMMONS, NC 27012
336-766-7511

DRAWN: JNG
DATE: 10/30/2015
REVISIONS:
1 2/8/16 Comments
2 5/11/16 GUARDRAIL

JOB. NO: 15-077

SHEET TITLE:
VILLAGE POINT DRIVE
STA 22+00.00
TO STA 25+50.53

SCALE:

SHEET NO.:
C-4.2

© STIMMEL ASSOCIATES, P.A.

F:\13-234\Drawings\CD\NCDOT Redesign\13-234 civil.dwg - C-4.2 PLAN AND PROFILE 05/16/16 11:27am

NOTES:

1. THE GEOTECHNICAL ENGINEER SHALL VERIFY ALL SUBGRADES, UNDERCUT LIMITS AND DEPTHS.

2. TEMPORARY SHORING MAY BE REQUIRED AND SHALL BE INCLUDED IN THE CONTRACTOR'S BID.

3. DEWATERING MAY BE REQUIRED AND SHALL BE INCLUDED IN THE CONTRACTOR'S BID.

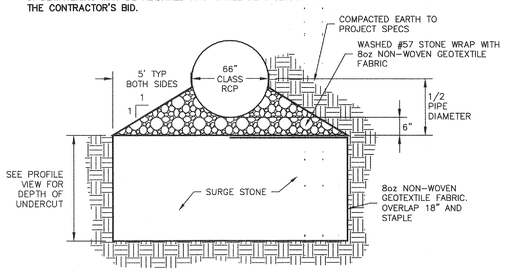

SECTION A-A

RIPRAP LINED PLUNGE POOL FOR CANTILEVER OUTLET
Reference Design Note No. 6 (Second Edition), Jan. 23, 1986

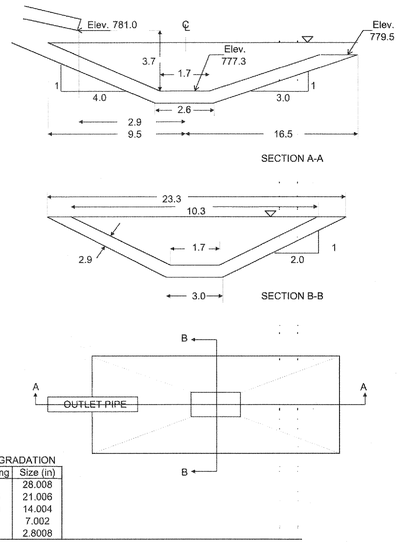

ROCK GRADATION

% Passing	Size (in)
100	28.008
60-85	21.006
25-50	14.004
5-20	7.002
0-5	2.8008

PLUNGE POOL

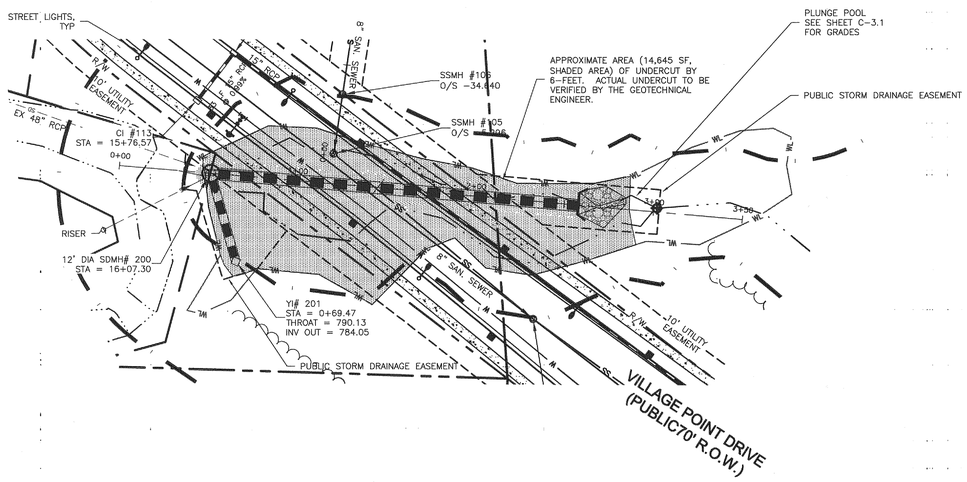

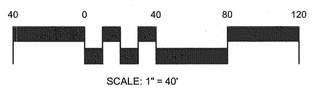

SCALE: 1" = 40'

North

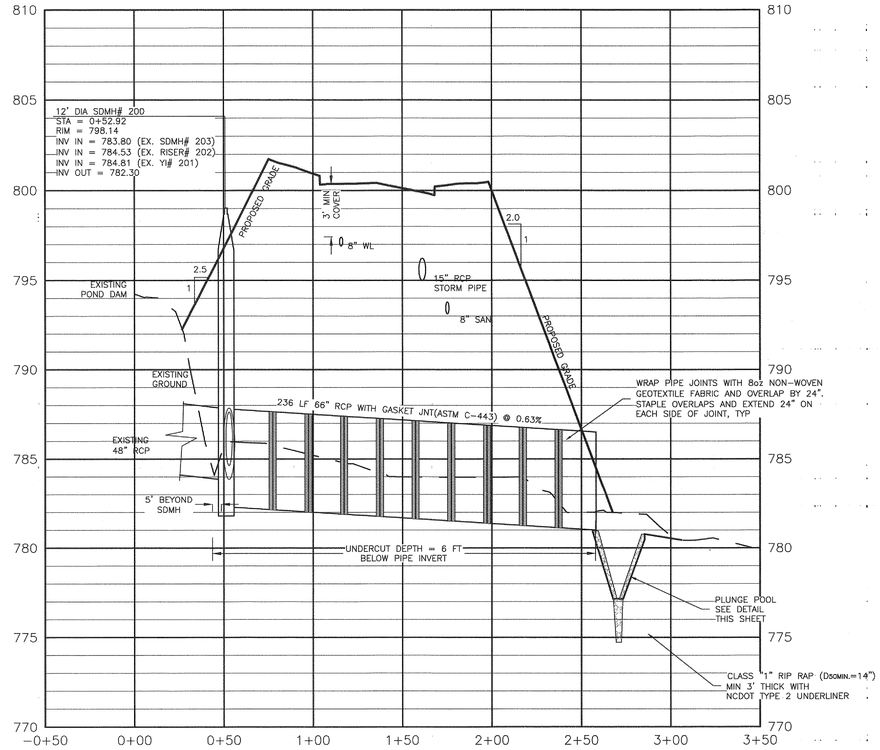

PROFILE SCALE	
HORIZ.	1"=40'
VERT.	1"=4'

NOTE:

UTILITY INSTALLATION BETWEEN STA. 19+00 AND STA. 25+50 WILL BE DELAYED UNTIL THE EMBANKMENT SETTLEMENT HAS STOPPED AS DETERMINED BY THE GEOTECHNICAL ENGINEER. THE CONTRACTOR SHALL PROVIDE SETTLEMENT HUBS AS REQUIRED BY THE GEOTECHNICAL ENGINEER AND PROVIDE AT A MINIMUM BI-WEEKLY ELEVATIONS FOR THE FIRST TWO WEEKS AND WEEKLY THERE AFTER TO THE GEOTECHNICAL ENGINEER FOR REVIEW.

Stimmel

Stimmel Associates, PA
Landscape Architecture
Civil Engineering
Land Planning

601 N. Trade Street Suite 200
Winston Salem, NC 27101-2916
P: 336.723.1067 F: 336.723.1069

SEALS:

NCBEES CERT. NO.: C-1347

NORTH CAROLINA PROFESSIONAL SEAL 027912 ENGINEER KELVAY L. HOWARD III 2/8/16

PROJECT:

VILLAGE POINT
VILLAGE POINT DRIVE PHASE IV
CLEMMONS, NORTH CAROLINA

CLIENT:

THE VILLAGE OF CLEMMONS
3715 CLEMMONS ROAD
CLEMMONS, NC 27012
336-766-7511

DRAWN:	JNG
DATE:	10/30/2015

REVISIONS:

1 2/8/16 Comments

JOB. NO: 15-077

SHEET TITLE:

CULVERT PLAN AND PROFILES STA. 16+82.84

SCALE:

SHEET NO.:

C-4.3

© STIMMEL ASSOCIATES, P.A.

F:\13-234\Drawings\CD\NCDOT Redesign\13-234 civil.dwg : C-4.3 CULVERT PROFILE 02/19/16 1:39pm

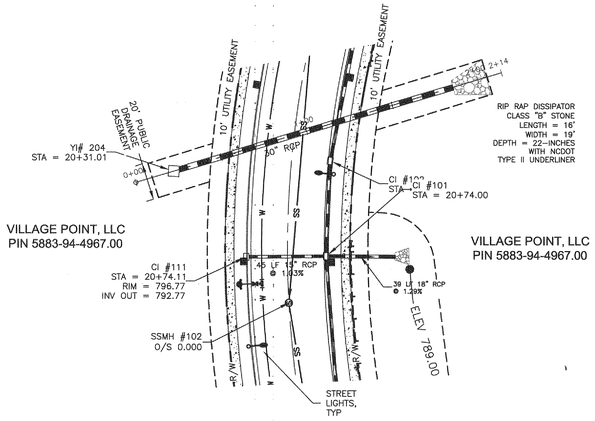

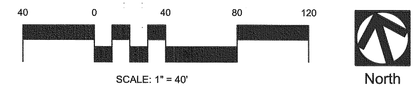

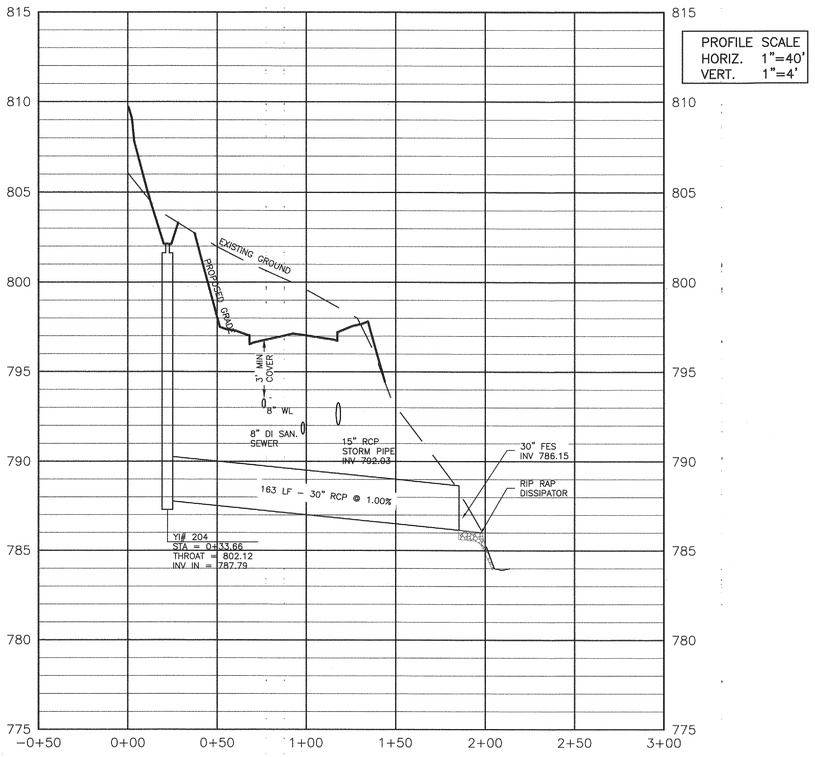

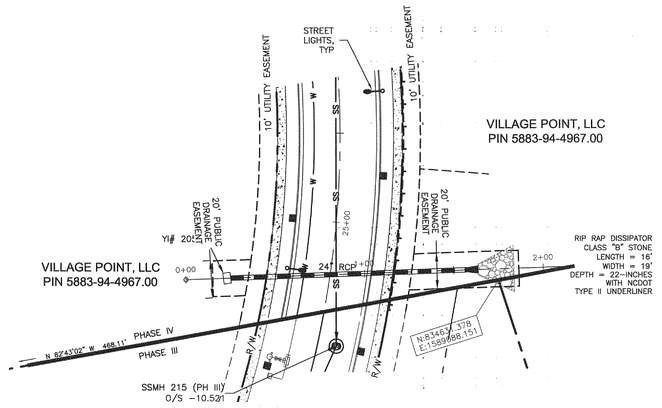

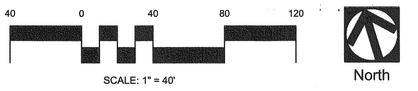

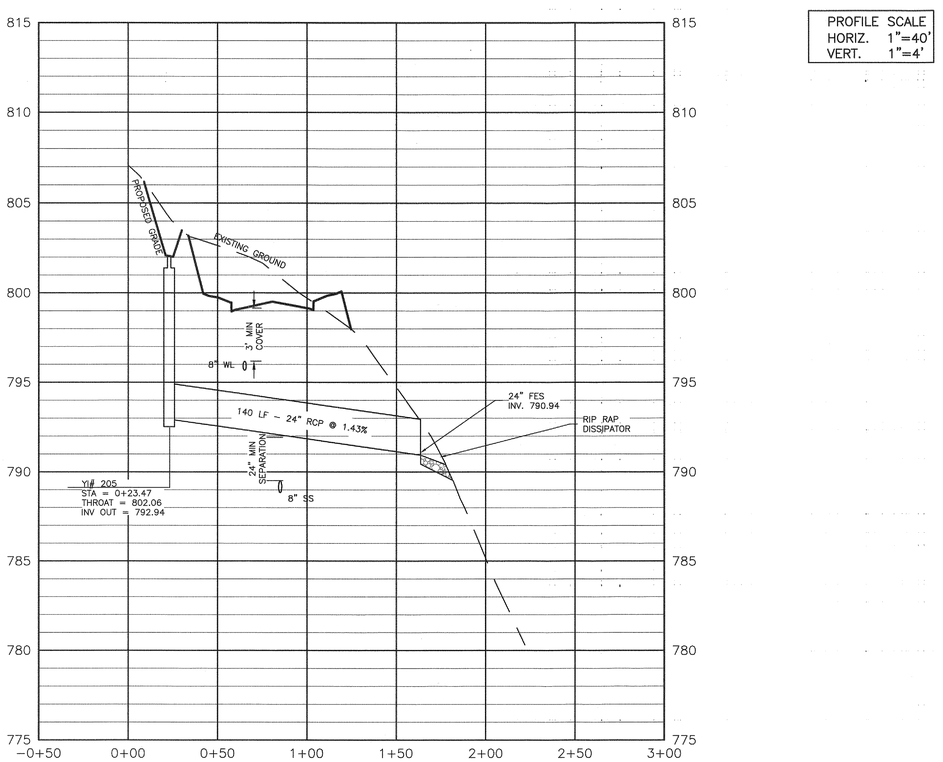

Stimmel

Stimmel Associates, PA
Landscape Architecture
Civil Engineering
Land Planning

601 N. Trade Street Suite 200
Winston Salem, NC 27101-2916
P: 336.723.1067 F: 336.723.1069

SEALS:

NCBEES CERT. NO.: C-1347

NORTH CAROLINA PROFESSIONAL ENGINEER SEAL 027912 KELWAY L. HOWARD III

PROJECT:

VILLAGE POINT
VILLAGE POINT DRIVE PHASE IV
CLEMMONS, NORTH CAROLINA

CLIENT:

THE VILLAGE OF CLEMMONS
3715 CLEMMONS ROAD
CLEMMONS, NC 27012
336-766-7511

DRAWN:	JNG
DATE:	10/30/2015

REVISIONS:
- 2/8/16 Comments
- 5/11/16 REV. CULVERT, GUARDRAIL

JOB. NO: 15-077

SHEET TITLE:

CULVERT PLAN AND PROFILES
STA. 20+06.93
STA 25+89.89

SCALE:

SHEET NO.:

C-4.4

© STIMMEL ASSOCIATES, P.A.

F:\13-234\Drawings\CD\NCDOT Redesign\13-234 civil.dwg : C-4.4 CULVERT PROFILE 05/16/16 11:30am

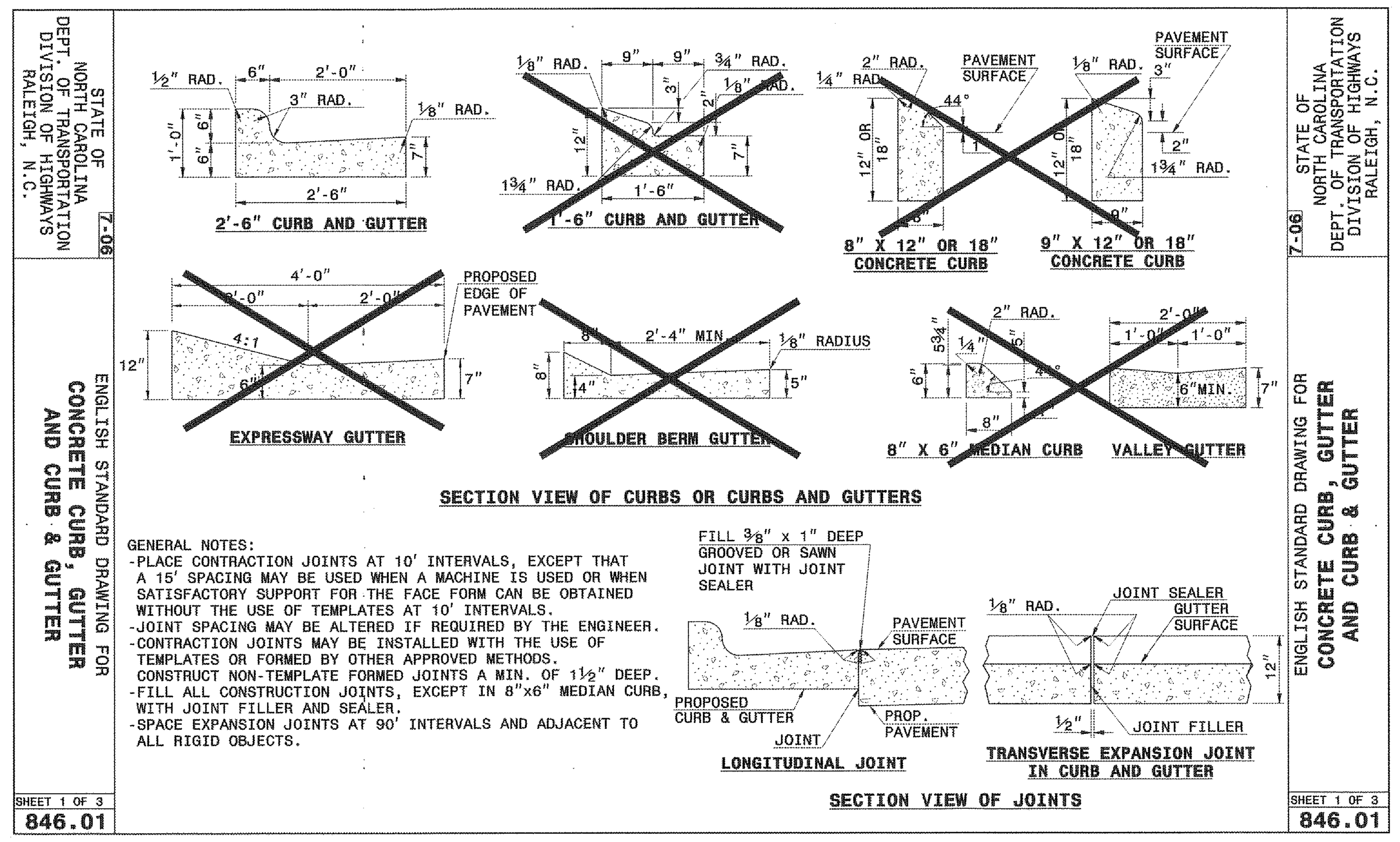

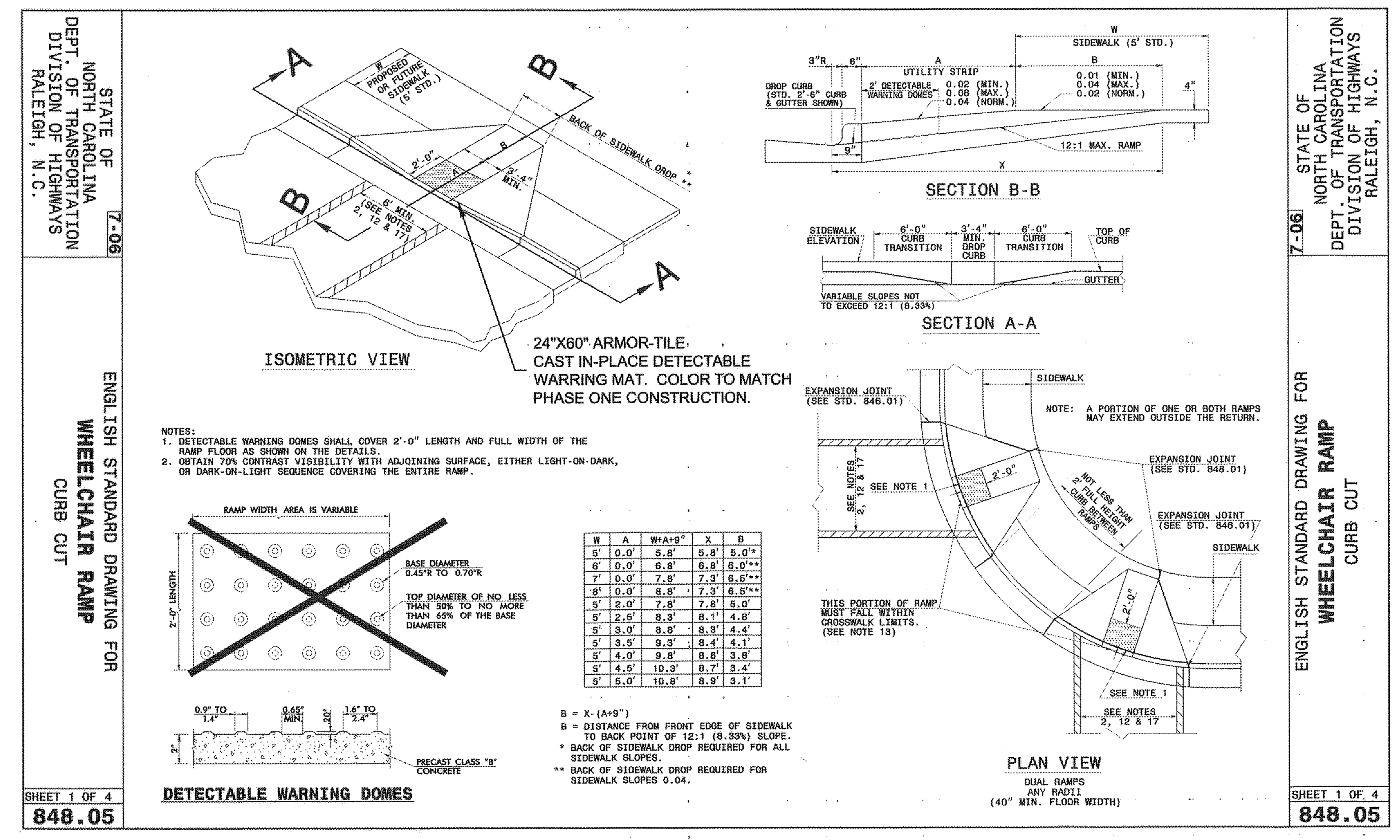

W	A	W+A+9"	X	B
5'	0.0'	5.8'	5.8'	5.0'*
6'	0.0'	6.8'	6.8'	6.0'**
7'	0.0'	7.8'	7.3'	6.5'**
8'	0.0'	8.8'	7.3'	6.5'**
5'	2.0'	7.8'	7.8'	5.0'
5'	2.5'	8.3'	8.1'	4.8'
5'	3.0'	8.8'	8.3'	4.4'
5'	3.5'	9.3'	8.4'	4.1'
5'	4.0'	9.8'	8.6'	3.8'
5'	4.5'	10.3'	8.7'	3.4'
5'	5.0'	10.8'	8.9'	3.1'

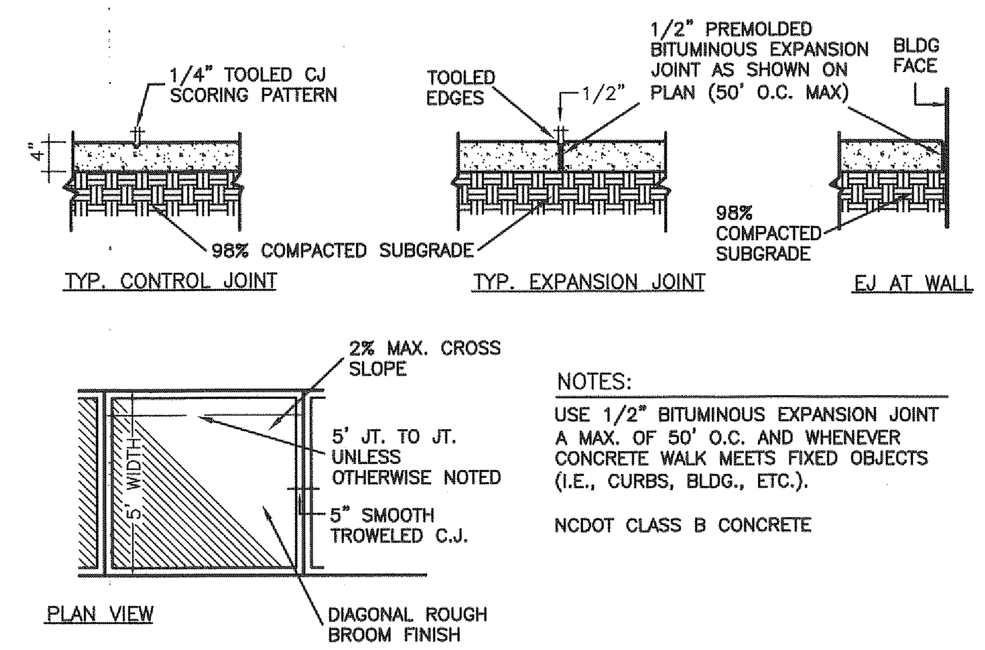

NOTES:

USE 1/2" BITUMINOUS EXPANSION JOINT A MAX. OF 50' O.C. AND WHENEVER CONCRETE WALK MEETS FIXED OBJECTS (I.E., CURBS, BLDG., ETC.).

NCDOT CLASS B CONCRETE

1 CONCRETE WALK

SCALE: NTS

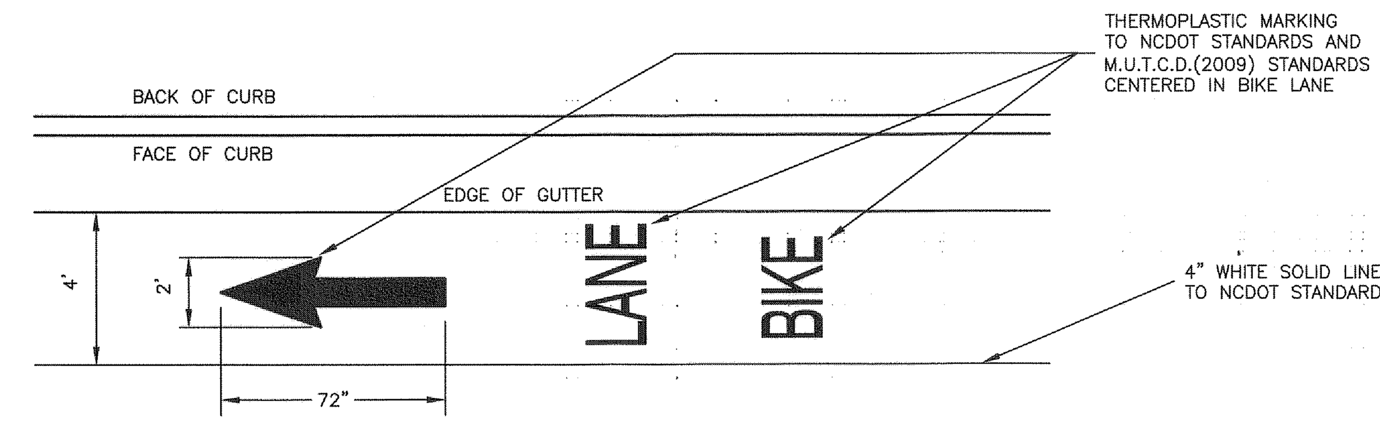

2 BICYCLE LANE PAVEMENT MARKINGS

SCALE: NTS

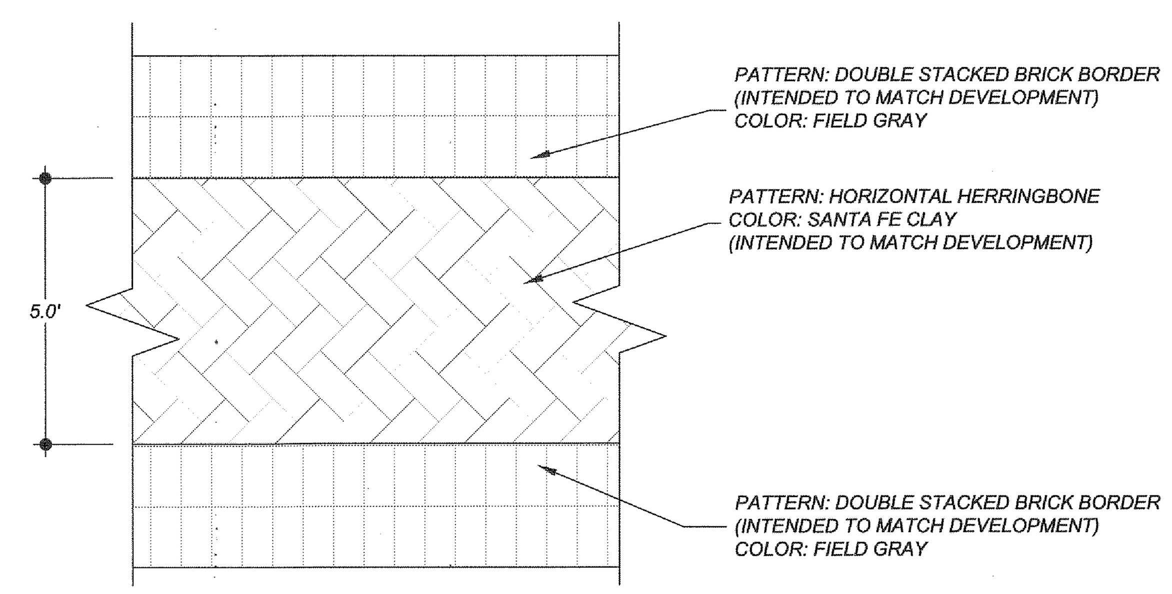

CROSSWALK DETAIL

3 STAMPED ASPHALT CROSSWALK

SCALE: NTS

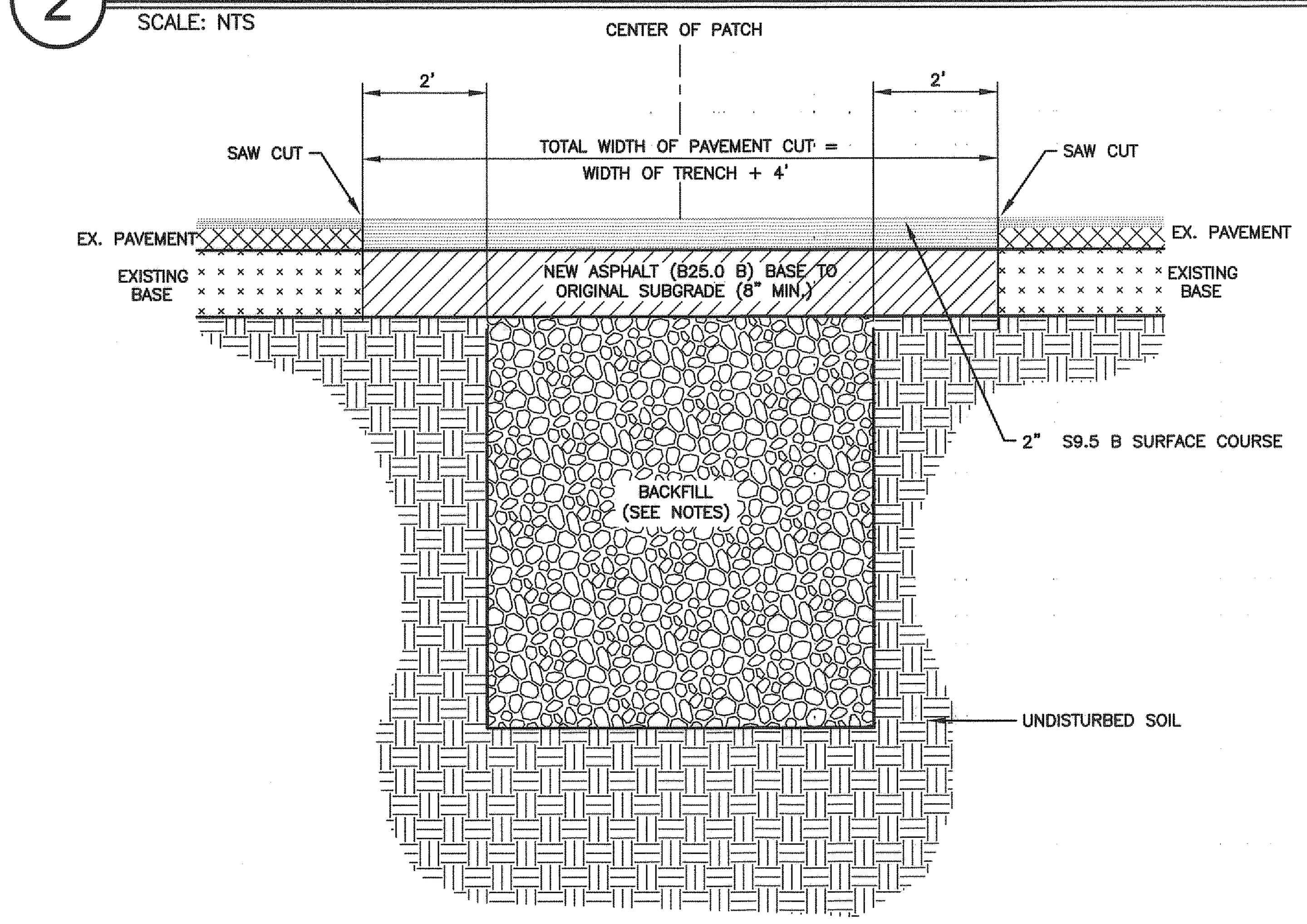

THE BACKFILL SHALL BE MADE IN 6" LAYERS AND SHALL BE COMPACTED TO AT LEAST 95% OF STANDARD DENSITY (AASHTO METHOD T-99). EACH LAYER MUST BE THOROUGHLY TAMPED BY A MECHANICAL TAMP BEFORE THE NEXT LAYER IS PLACED. ALL ASPHALT PAVEMENT REPLACED SHALL BE IN ACCORDANCE WITH THE MOST CURRENT N.C.D.O.T. STANDARD SPECIFICATIONS. BASE COURSE DENSITY AND SUBGRADE DENSITY SHALL BE 100%.

4 ASPHALT PAVEMENT REPAIR

SCALE: NTS

Stimmel

Stimmel Associates, PA
Landscape Architecture
Civil Engineering
Land Planning
601 N. Trade Street Suite 200
Winston Salem, NC 27101-2916
P: 336.723.1067 F: 336.723.1069

SEALS:

NCBEES CERT. NO.: C-1347

NORTH CAROLINA PROFESSIONAL SEAL 027912 5/11/16 ENGINEER KELWAY L. HOWARD III

PROJECT:

VILLAGE POINT
VILLAGE POINT DRIVE PHASE IV
CLEMMONS, NORTH CAROLINA

CLIENT:

THE VILLAGE OF CLEMMONS
3715 CLEMMONS ROAD
CLEMMONS, NC 27012
336-766-7511

DRAWN: JNG
DATE: 10/30/2015
REVISIONS:
1 2/8/16 Comments
2 5/11/16 REV. STAMPED ASPHALT

JOB. NO: 15-077
SHEET TITLE:
ROADWAY DETAILS

SCALE: NONE
SHEET NO.:
C-6.0

© STIMMEL ASSOCIATES, P.A.

F:\13-234\Drawings\CD\NCDOT Redesign\13-234 C-6.0 DETAILS.dwg : C-6.0 05/16/16 1:44pm

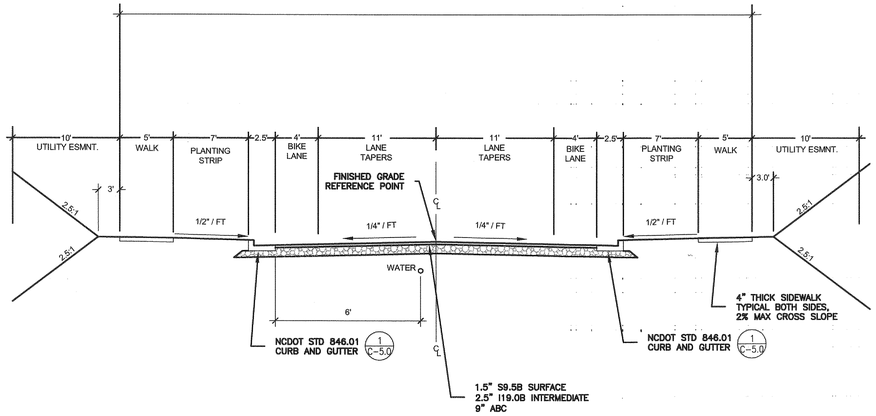

VILLAGE POINT DRIVE SECTION
STA 12+64.45 TO 14+90.00

1 N.T.S.

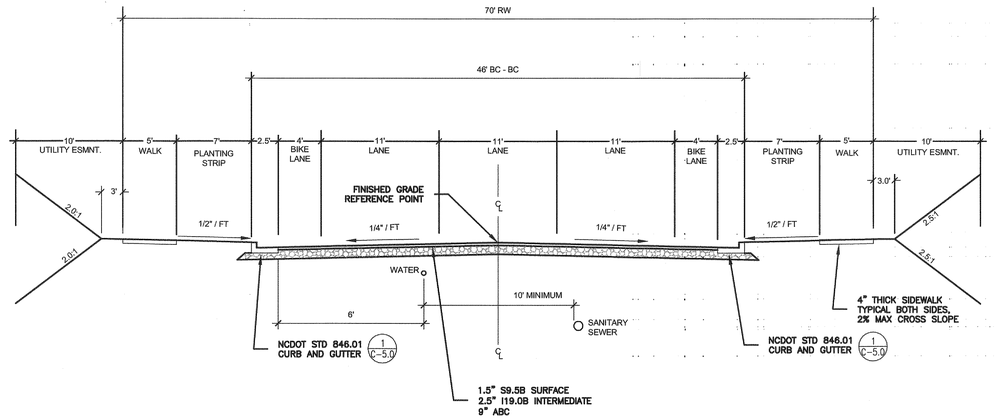

VILLAGE POINT DRIVE SECTION
STA 14+90.00 TO 18+81.40

2 N.T.S.

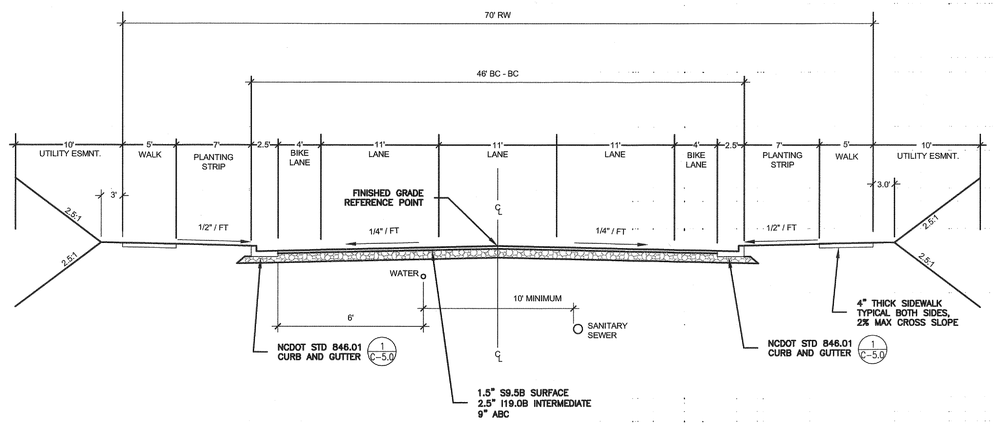

VILLAGE POINT DRIVE SECTION
STA 18+81.40 TO 25+50.55

2 N.T.S.

Stimmel

Stimmel Associates, PA
Landscape Architecture
Civil Engineering
Land Planning

601 N. Trade Street Suite 200
Winston Salem, NC 27101-2916
P: 336.723.1067 F: 336.723.1069

SEALS:

NCBEES CERT. NO.: C-1347

NORTH CAROLINA PROFESSIONAL SEAL 027912 ENGINEER KELWAY L. HOWARD III 2/8/16

PROJECT:

VILLAGE POINT
VILLAGE POINT DRIVE PHASE IV
CLEMMONS, NORTH CAROLINA

CLIENT:

THE VILLAGE OF CLEMMONS
3715 CLEMMONS ROAD
CLEMMONS, NC 27012
336-766-7511

DRAWN:	JNG
DATE:	10/30/2015

REVISIONS:
2/8/16 Comments

JOB. NO: 15-077

SHEET TITLE:
TYPICAL STREET SECTIONS

SCALE: NONE

SHEET NO.:
C-6.1

© STIMMEL ASSOCIATES, P.A.

F:\13-234\Drawings\CD\NCDOT Redesign\13-234 C-6.0 DETAILS.dwg C-6.1 02/19/16 2:13pm

STATE OF NORTH CAROLINA DEPT. OF TRANSPORTATION DIVISION OF HIGHWAYS RALEIGH, N.C. — 7-06
ENGLISH STANDARD DRAWING FOR METHOD OF PIPE INSTALLATION — METHOD 'A'

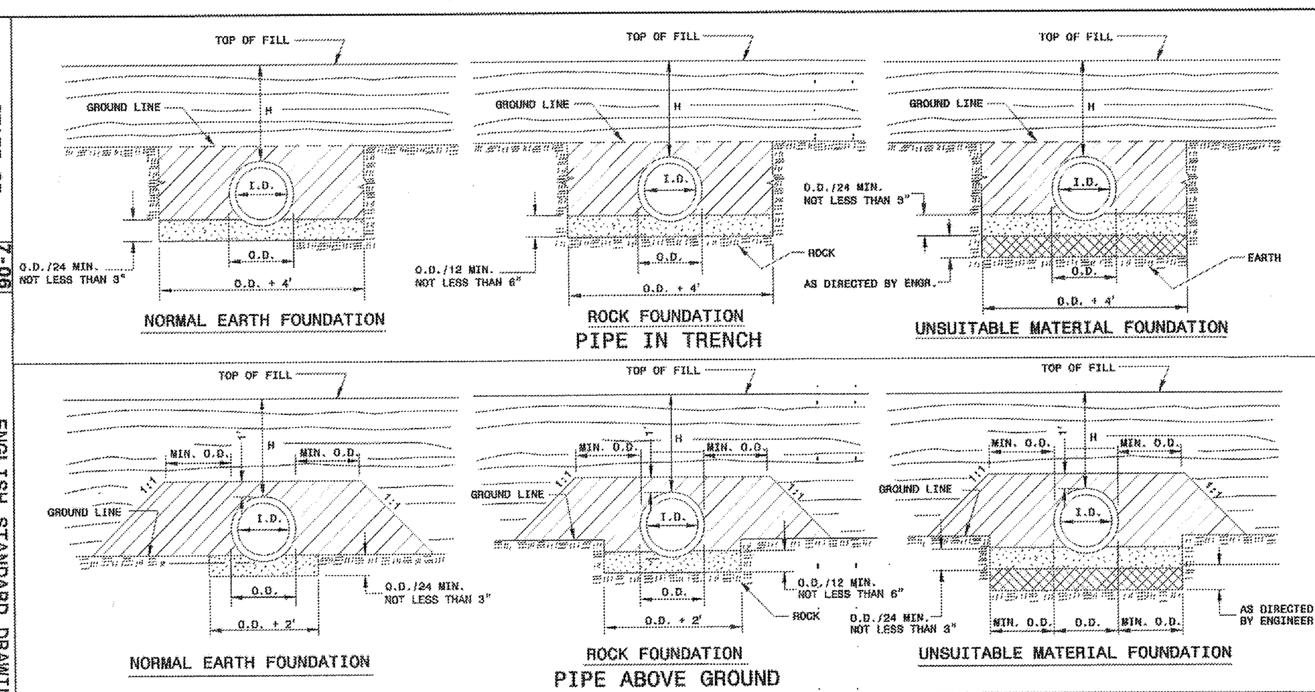

GENERAL NOTES:

I.D. = THE MAXIMUM HORIZONTAL INSIDE DIMENSION.

O.D. = THE MAXIMUM HORIZONTAL OUTSIDE DIMENSION.

H = THE FILL HEIGHT MEASURED VERTICALLY AT ANY POINT ALONG THE PIPE FROM THE TOP OF THE PIPE TO THE TOP OF THE EMBANKMENT AT THAT POINT.

LOOSELY PLACED APPROVED SUITABLE LOCAL MATERIAL OR SELECT MATERIAL FOR FOUNDATION CONDITIONING AS DIRECTED BY THE ENGINEER. (STONE WILL NOT BE ALLOWED)

APPROVED SUITABLE LOCAL MATERIAL OR SELECT MATERIAL FOR FOUNDATION CONDITIONING AS DIRECTED BY THE ENGINEER.

APPROVED BACKFILL OR SELECT BACKFILL MATERIAL. WHEN 'H' IS GREATER THAN 30', USE SELECT MATERIAL OF THE APPROPRIATE CLASS AS FOLLOWS:

UNDISTURBED EARTH MATERIAL

SELECT MATERIAL	'H'
CLASS IV	OVER 50 FEET
CLASS III	OVER 40 FEET THROUGH 50 FEET
CLASS II	OVER 30 FEET THROUGH 40 FEET

THE CLASS OF SELECT MATERIAL USED FOR AN INDIVIDUAL PIPE INSTALLATION IS BASED ON THE MAXIMUM 'H' WHICH OCCURS ALONG THE PIPE INSTALLATION. A HIGHER CLASS SELECT MATERIAL, NOT TO EXCEED CLASS IV, MAY BE USED IN LIEU OF CLASS II OR III.

SELECT MATERIAL WILL NOT BE REQUIRED AROUND THOSE PORTIONS OF AN INDIVIDUAL PIPE INSTALLATION LOCATED UNDER THAT PART OF THE FILL WHERE 'H' IS 30 FEET OR LESS

DO NOT OPERATE HEAVY EQUIPMENT OVER ANY PIPE CULVERT UNTIL THE PIPE CULVERT HAS BEEN PROPERLY BACKFILLED AND COVERED WITH AT LEAST 3 FEET OF APPROVED MATERIAL.

SHEET 1 OF 1 — 300.01

STATE OF NORTH CAROLINA DEPT. OF TRANSPORTATION DIVISION OF HIGHWAYS RALEIGH, N.C. — 1-12
ENGLISH STANDARD DRAWING FOR MANHOLE FRAME AND COVER

SOLID COVER SHOWN PERFORATED. PERFORATED AVAILABLE IF SPECIFIED.
STATE USE OF SYSTEM ON COVER
(I.E.: SEWER, STORM DRAIN, ELECTRICAL)

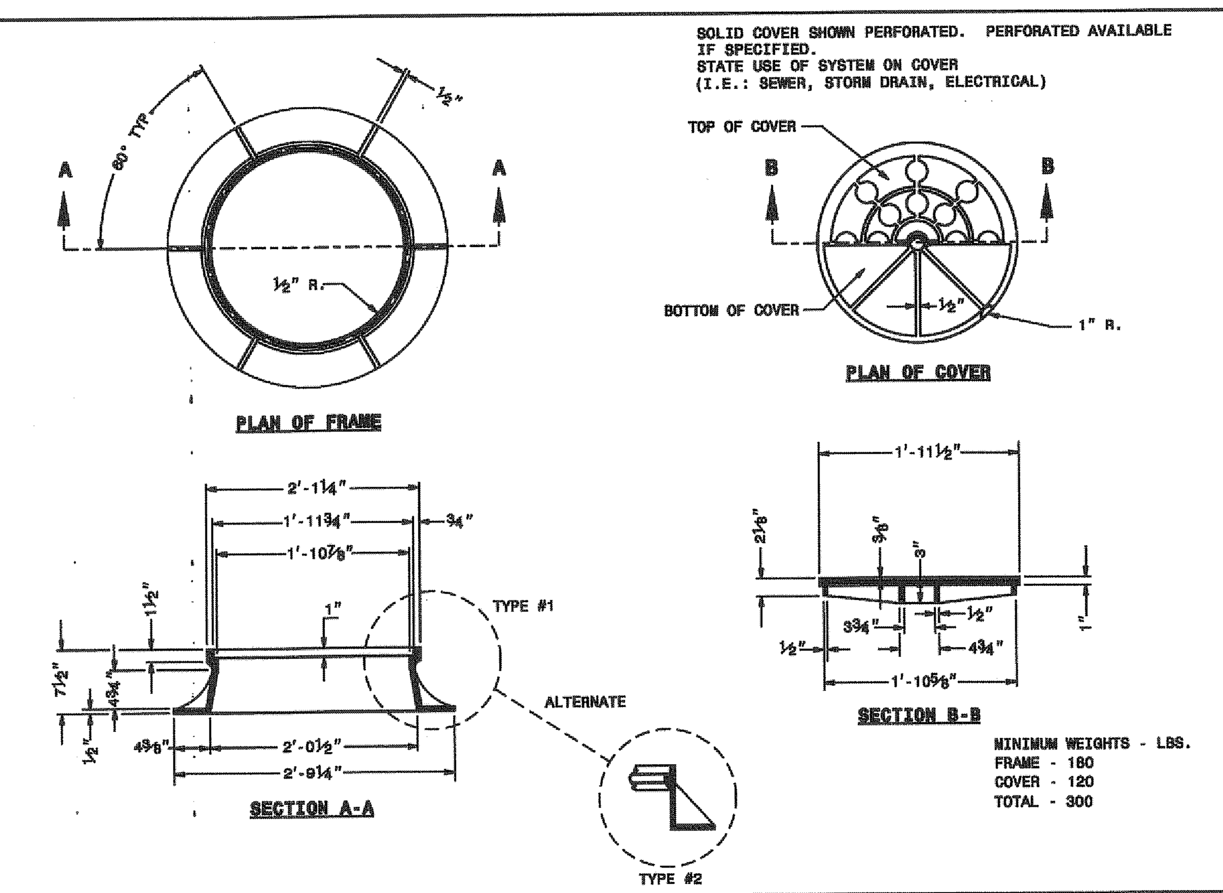

MINIMUM WEIGHTS - LBS.
FRAME - 180
COVER - 120
TOTAL - 300

SHEET 1 OF 1 — 840.54

STATE OF NORTH CAROLINA DEPT. OF TRANSPORTATION DIVISION OF HIGHWAYS RALEIGH, N.C. — 7-06
ENGLISH STANDARD DRAWING FOR CONCRETE CATCH BASIN — 12" THRU 54" PIPE

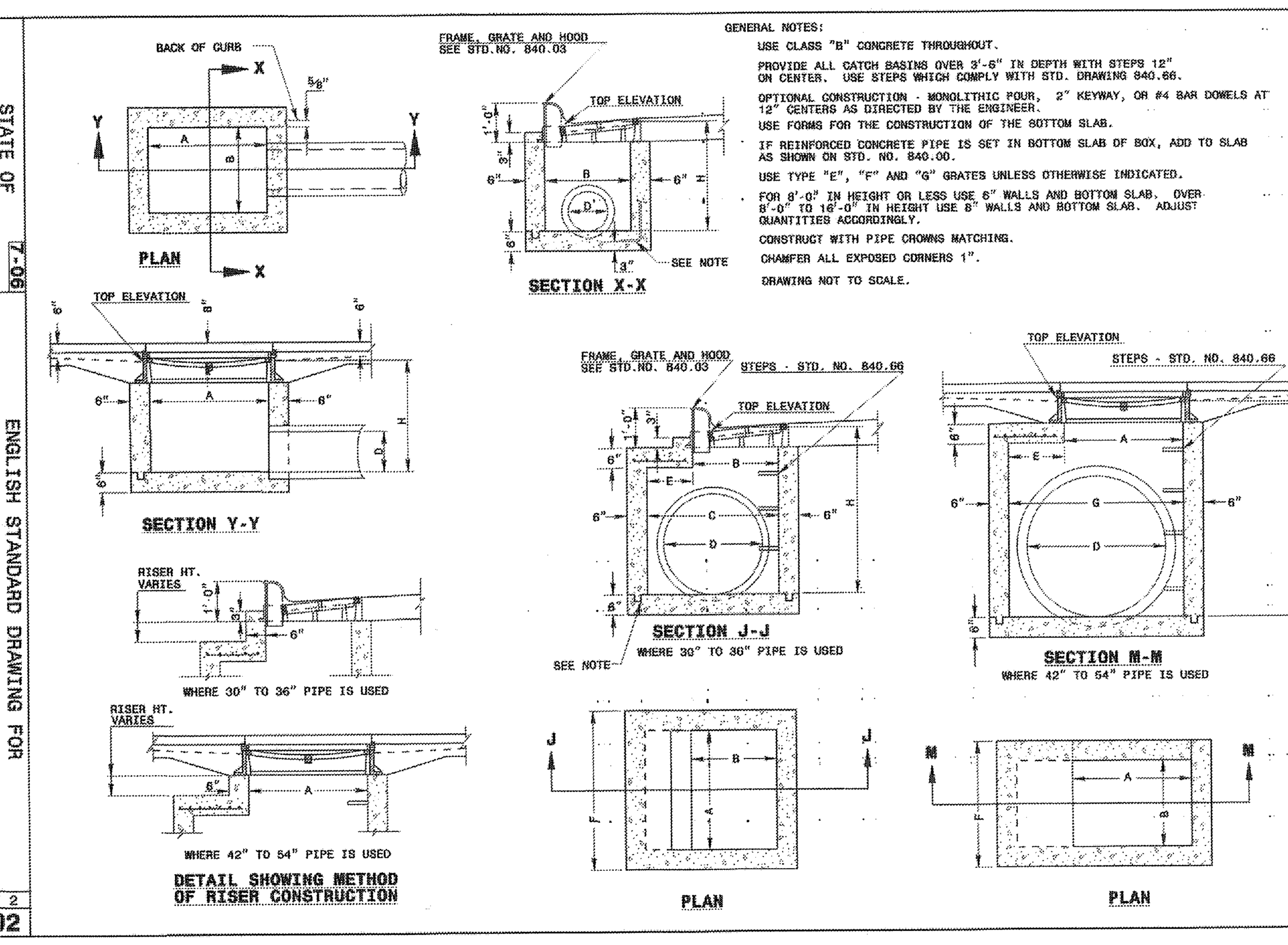

GENERAL NOTES:

USE CLASS "B" CONCRETE THROUGHOUT.

PROVIDE ALL CATCH BASINS OVER 3'-6" IN DEPTH WITH STEPS 12" ON CENTER. USE STEPS WHICH COMPLY WITH STD. DRAWING 840.66.

OPTIONAL CONSTRUCTION - MONOLITHIC POUR, 2" KEYWAY, OR #4 BAR DOWELS AT 12" CENTERS AS DIRECTED BY THE ENGINEER.

USE FORMS FOR THE CONSTRUCTION OF THE BOTTOM SLAB.

IF REINFORCED CONCRETE PIPE IS SET IN BOTTOM SLAB OF BOX, ADD TO SLAB AS SHOWN ON STD. NO. 840.00.

USE TYPE "E", "F" AND "G" GRATES UNLESS OTHERWISE INDICATED.

FOR 8'-0" IN HEIGHT OR LESS USE 6" WALLS AND BOTTOM SLAB. OVER 8'-0" TO 16'-0" IN HEIGHT USE 8" WALLS AND BOTTOM SLAB. ADJUST QUANTITIES ACCORDINGLY.

CONSTRUCT WITH PIPE CROWNS MATCHING.

CHAMFER ALL EXPOSED CORNERS 1".

DRAWING NOT TO SCALE.

SHEET 1 OF 2 — 840.02

STATE OF NORTH CAROLINA DEPT. OF TRANSPORTATION DIVISION OF HIGHWAYS RALEIGH, N.C. — 7-06
ENGLISH STANDARD DRAWING FOR PRECAST MANHOLE 4', 5' AND 6' DIAMETER — 12" THRU 48" PIPE

GENERAL NOTES

USE 4000 PSI MINIMUM COMPRESSIVE STRENGTH CONCRETE.

FABRICATE, ASSEMBLE AND DESIGN PRECAST MANHOLE COMPONENTS ACCORDANCE WITH AASHTO M199.

ASSEMBLE RISER AND GRADE RINGS WITH THE STEPS SPACED 12" FROM THE TOP TO THE BOTTOM OF THE MANHOLE.

WHERE THE MANHOLE IS EXPOSED TO ROAD TRAFFIC, CONSTRUCT THE TOP OF THE MANHOLE FLUSH WITH THE GROUND AND A MINIMUM OF 9" ABOVE THE GROUND AT OTHER LOCATIONS.

LIMIT DEPTH OF FILL TO 30'-0" FROM FINISH GRADE TO TOP OF BOTTOM SLAB.

THE MIN. SLAB THICKNESS 'T' IS THE DIMENSION OF THE THINNEST PORTION OF THE TOP/BOTTOM SLAB.

* TOP MAT OF REINFORCEMENT MAY BE NEGLECTED IF TOP SLAB HAS A DISTINGUISHABLE TOP AND BOTTOM.

D	W	T	As
INTERNAL DIAMETER (FT.)	MIN. WALL THICKNESS (IN.)	MIN. TOP/BOTTOM SLAB THICKNESS (IN.)	MIN. CIRCUMFERENTIAL AREA OF STEEL PER VERTICAL FT. (SQ. IN.)
4	4	6	0.12
5	5	8	0.15
6	6	8	0.18

FRAME AND GRATES	STD. NO.
TRAFFIC BEARING	840.37
NONTRAFFIC BEARING:	840.22
	840.24
	840.20
	840.29
	840.33

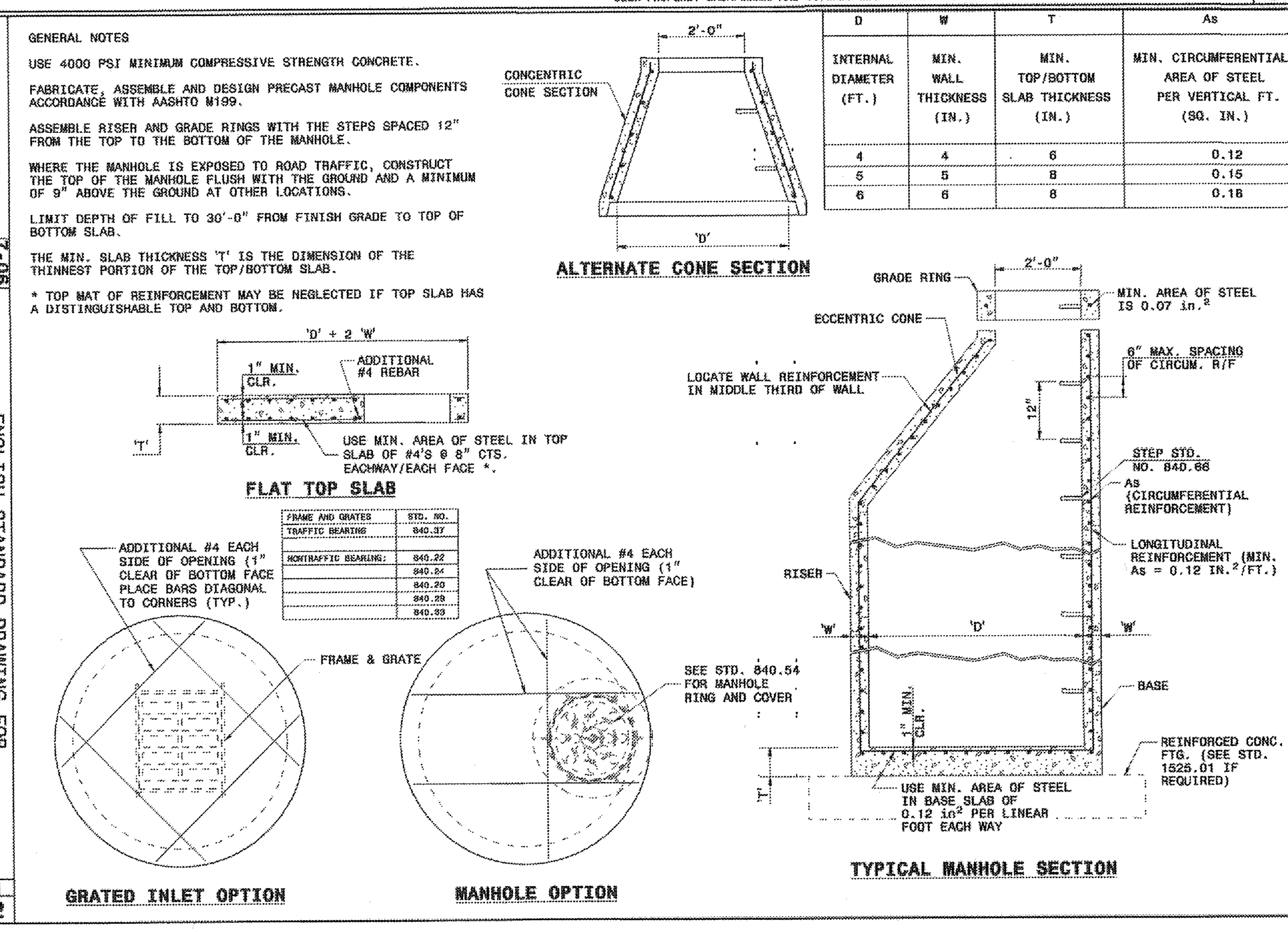

SHEET 1 OF 1 — 840.52

STATE OF NORTH CAROLINA DEPT. OF TRANSPORTATION DIVISION OF HIGHWAYS RALEIGH, N.C. — 7-06
ENGLISH STANDARD DRAWING FOR CONCRETE OPEN THROAT CATCH BASIN — 12" THRU 48" PIPE

PROVIDE A YARD RING & COVER IN TOP FOR ALL INLETS, ALIGN WITH STEPS

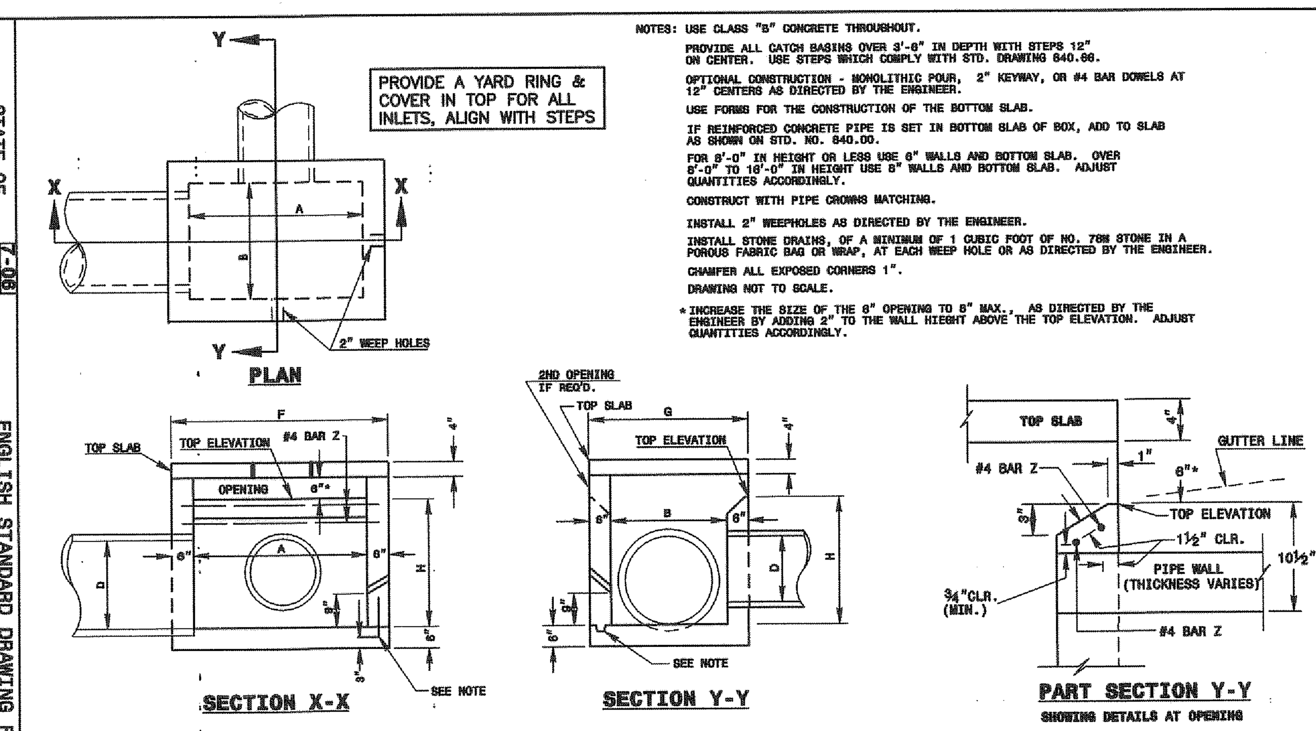

NOTES: USE CLASS "B" CONCRETE THROUGHOUT.

PROVIDE ALL CATCH BASINS OVER 3'-6" IN DEPTH WITH STEPS 12" ON CENTER. USE STEPS WHICH COMPLY WITH STD. DRAWING 840.66.

OPTIONAL CONSTRUCTION - MONOLITHIC POUR, 2" KEYWAY, OR #4 BAR DOWELS AT 12" CENTERS AS DIRECTED BY THE ENGINEER.

USE FORMS FOR THE CONSTRUCTION OF THE BOTTOM SLAB.

IF REINFORCED CONCRETE PIPE IS SET IN BOTTOM SLAB OF BOX, ADD TO SLAB AS SHOWN ON STD. NO. 840.00.

FOR 8'-0" IN HEIGHT OR LESS USE 6" WALLS AND BOTTOM SLAB. OVER 8'-0" TO 16'-0" IN HEIGHT USE 8" WALLS AND BOTTOM SLAB. ADJUST QUANTITIES ACCORDINGLY.

CONSTRUCT WITH PIPE CROWNS MATCHING.

INSTALL 2" WEEPHOLES AS DIRECTED BY THE ENGINEER.

INSTALL STONE DRAINS, OF A MINIMUM OF 1 CUBIC FOOT OF NO. 78M STONE IN A POROUS FABRIC BAG OR WRAP, AT EACH WEEP HOLE OR AS DIRECTED BY THE ENGINEER.

CHAMFER ALL EXPOSED CORNERS 1".

DRAWING NOT TO SCALE.

* INCREASE THE SIZE OF THE 6" OPENING TO 8" MAX., AS DIRECTED BY THE ENGINEER BY ADDING 2" TO THE WALL HIEGHT ABOVE THE TOP ELEVATION. ADJUST QUANTITIES ACCORDINGLY.

MIN. DIMENSIONS AND QUANTITIES FOR CONCRETE CATCH BASIN (BASED ON MIN. HEIGHT, H)

DIM'S OF BOX & PIPE				REINFORCING						TOP & BOT. SLAB DIMENSIONS		CU. YDS. CONC. IN BOX			TOTAL QUANTITIES BOX & SLABS		DEDUCTION ONE PIPE		DED. ONE 6" THROAT OPENING
PIPE	SPAN	WIDTH	HEIGHT	BARS - X		BARS - Y		BARS - Z											
D	A	B	H	NO.	LENGTH	NO.	LENGTH	NO.	LENGTH	F	G	TOP SLAB	BOT. SLAB	WALL/FT. HT.	LBS. REINF.	YD³ (MIN H)	C.S.	R.C.	YD³
12"	3'-6"	2'-3"	1'-10"	4	3'-0"	6	4'-3"	2	4'-3"	4'-6"	3'-3"	0.181	0.271	0.250	27	1.046	0.015	0.032	0.046
15"	3'-6"	2'-3"	2'-1"	4	3'-0"	6	4'-3"	2	4'-3"	4'-6"	3'-3"	0.181	0.271	0.250	27	1.108	0.023	0.036	0.046
18"	4'-0"	2'-8"	2'-4"	5	3'-6"	7	4'-8"	2	4'-9"	5'-0"	3'-8"	0.226	0.340	0.284	35	1.379	0.033	0.049	0.053
24"	4'-0"	2'-8"	2'-10"	5	3'-6"	7	4'-9"	2	4'-9"	5'-0"	3'-8"	0.226	0.340	0.284	35	1.621	0.059	0.085	0.053
30"	4'-0"	3'-6"	3'-4"	5	4'-3"	9	4'-9"	2	4'-9"	5'-0"	4'-6"	0.278	0.417	0.315	43	1.916	0.092	0.127	0.053
36"	4'-6"	4'-0"	3'-10"	5	4'-9"	10	5'-3"	2	5'-3"	5'-6"	5'-0"	0.340	0.510	0.352	51	2.390	0.132	0.178	0.059
42"	5'-0"	4'-6"	4'-4"	5	5'-3"	12	5'-9"	2	5'-9"	6'-0"	5'-6"	0.407	0.611	0.389	64	2.914	0.180	0.243	0.066
48"	5'-0"	5'-0"	4'-10"	5	5'-9"	13	5'-9"	2	5'-9"	6'-0"	6'-0"	0.444	0.666	0.407	68	3.298	0.235	0.317	0.066

SHEET 1 OF 2 — 840.04

STATE OF NORTH CAROLINA DEPT. OF TRANSPORTATION DIVISION OF HIGHWAYS RALEIGH, N.C. — 1-12
ENGLISH STANDARD DRAWING FOR FRAME, GRATES, AND HOOD FOR USE ON STANDARD CATCH BASIN

NOTE: USE TYPE "E", "F" AND "G" GRATE UNLESS OTHERWISE NOTED.

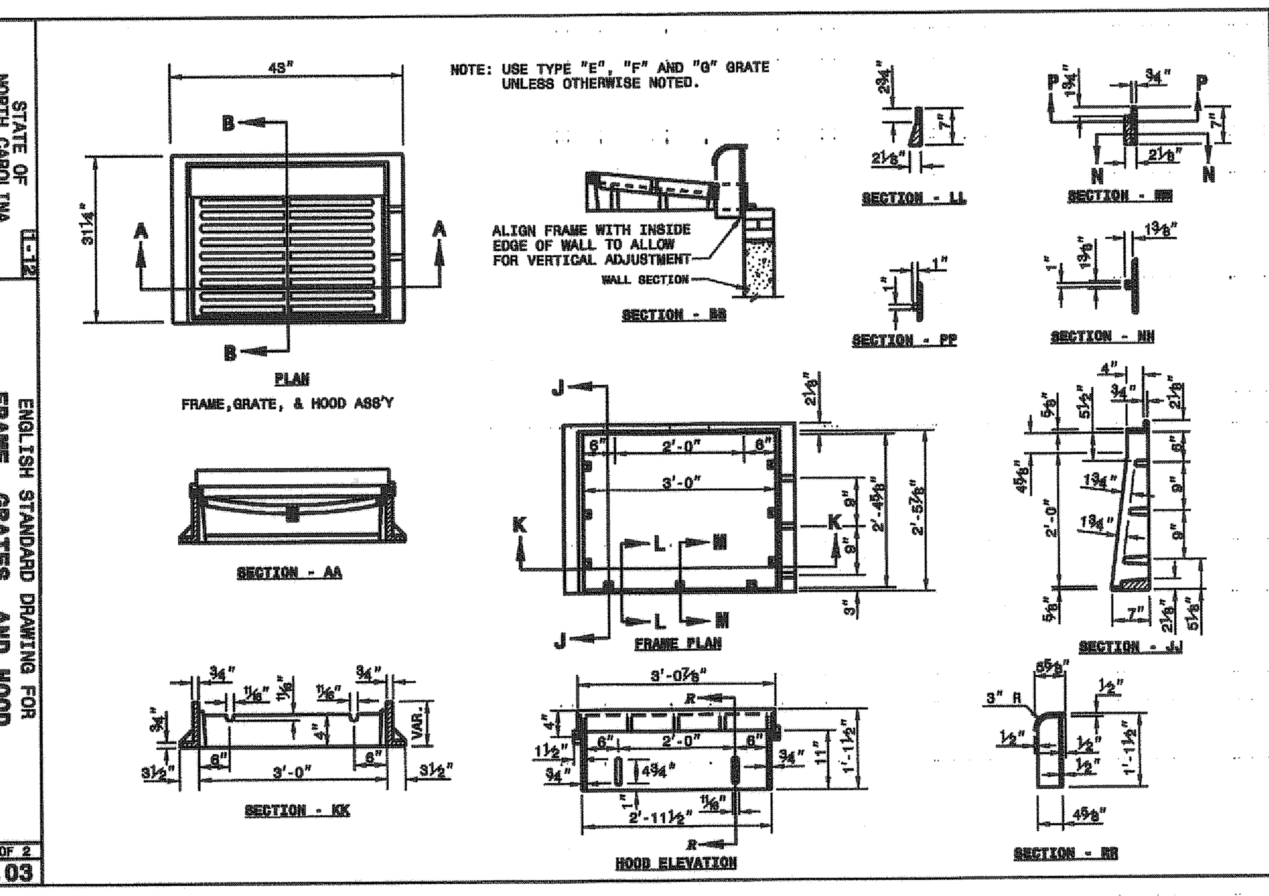

SHEET 1 OF 2 — 840.03

Stimmel

Stimmel Associates, PA
Landscape Architecture
Civil Engineering
Land Planning

601 N. Trade Street Suite 200
Winston Salem, NC 27101-2916
P: 336.723.1067 F: 336.723.1069

SEALS:

NCBEES CERT. NO.: C-1347

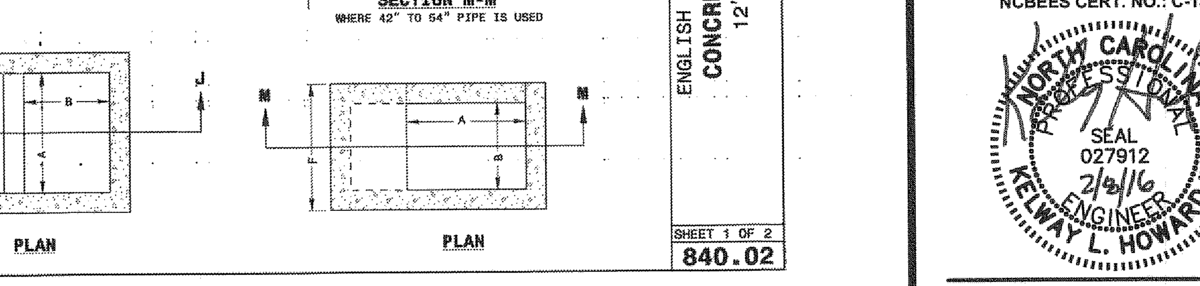

PROJECT:

VILLAGE POINT
VILLAGE POINT DRIVE PHASE IV
CLEMMONS, NORTH CAROLINA

CLIENT:

THE VILLAGE OF CLEMMONS
3715 CLEMMONS ROAD
CLEMMONS, NC 27012
336-766-7511

DRAWN: CY/JNG
DATE: 10/30/2015
REVISIONS:
1 2/8/16 Comments

JOB. NO: 15-077
SHEET TITLE:
STORM DRAINAGE DETAILS

SCALE: NONE
SHEET NO.:
C-6.2

© STIMMEL ASSOCIATES, P.A.

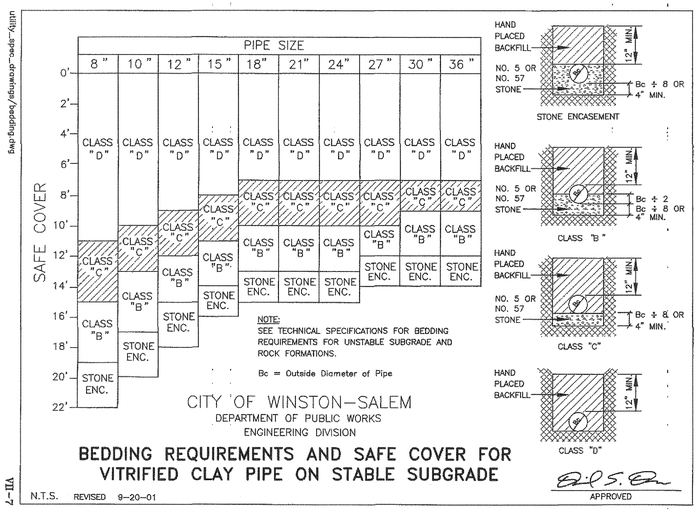

CITY OF WINSTON–SALEM
DEPARTMENT OF PUBLIC WORKS
ENGINEERING DIVISION

BEDDING REQUIREMENTS AND SAFE COVER FOR VITRIFIED CLAY PIPE ON STABLE SUBGRADE

N.T.S. REVISED 9–20–01 APPROVED

utility_spec_drawings/bedding.dwg VII–7

4 FT. PRECAST REINFORCED CONCRETE MANHOLE

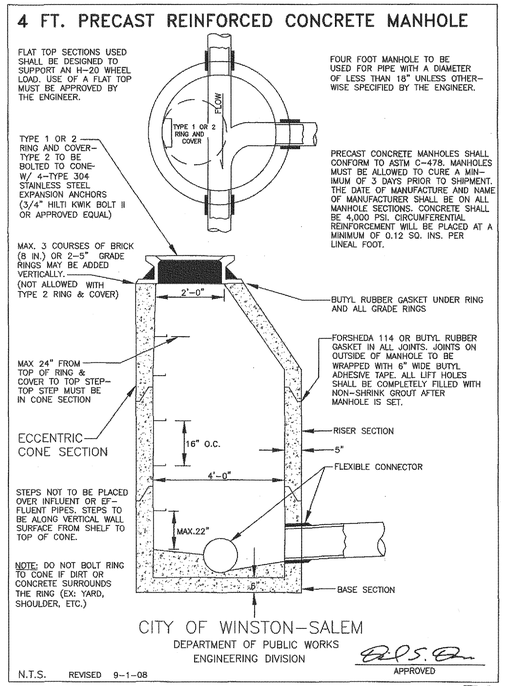

CITY OF WINSTON–SALEM
DEPARTMENT OF PUBLIC WORKS
ENGINEERING DIVISION

N.T.S. REVISED 9–1–08 APPROVED

R:\Data\AutoCad Stuff\Utility Spec Drawings/precast_4mh.dwg VII–8

MANHOLE RING & COVER TYPE 1

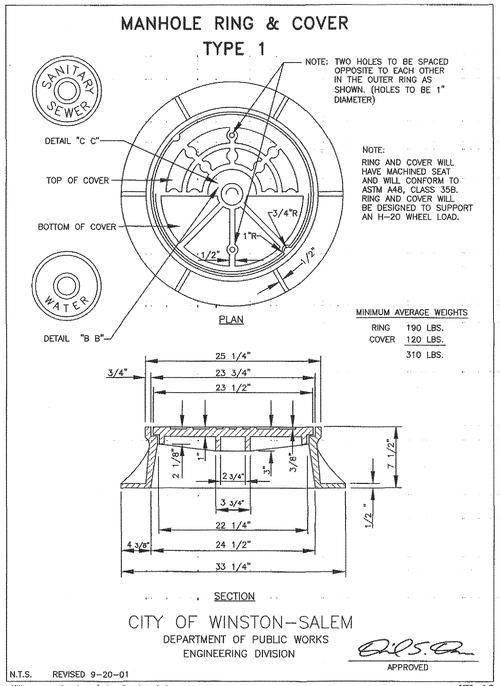

CITY OF WINSTON–SALEM
DEPARTMENT OF PUBLIC WORKS
ENGINEERING DIVISION

N.T.S. REVISED 9–20–01 APPROVED

utility_spec_drawings/mh_r&c_type1.dwg VII–16

OUTSIDE DROP MANHOLE

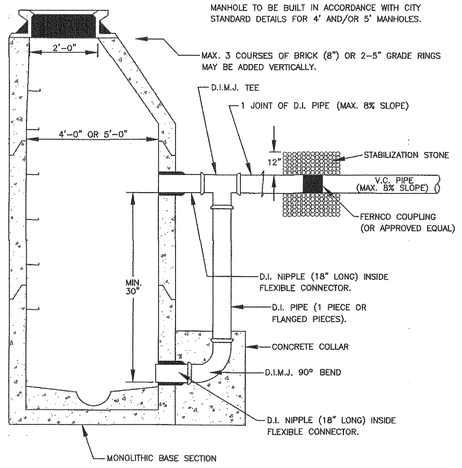

CITY OF WINSTON–SALEM
DEPARTMENT OF PUBLIC WORKS
ENGINEERING DIVISION

N.T.S. REVISED 9–1–08 APPROVED

R:\Data\AutoCad Stuff\Utility Spec Drawings/outside_drop_mh.dwg VII–12

HYDRANT AND VALVE INSTALLATION

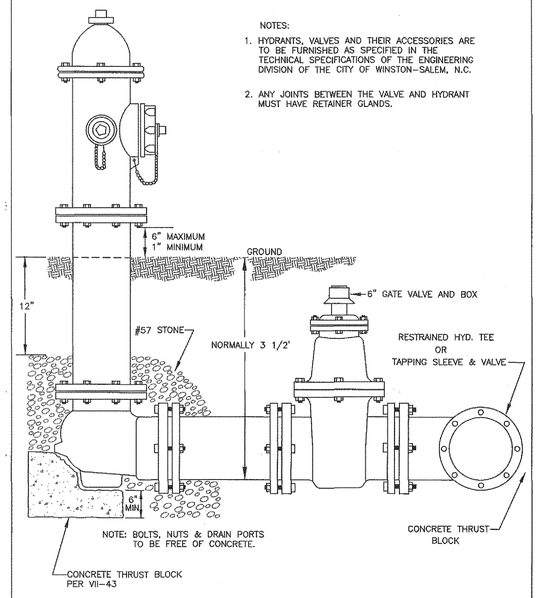

CITY OF WINSTON–SALEM
DEPARTMENT OF PUBLIC WORKS
ENGINEERING DIVISION

N.T.S. REVISED 1–7–14 APPROVED

R:\Data\Utility\Utility Spec Drawings/hydrant and valve installation.dwg VII–39

CONCRETE THRUST BLOCKS

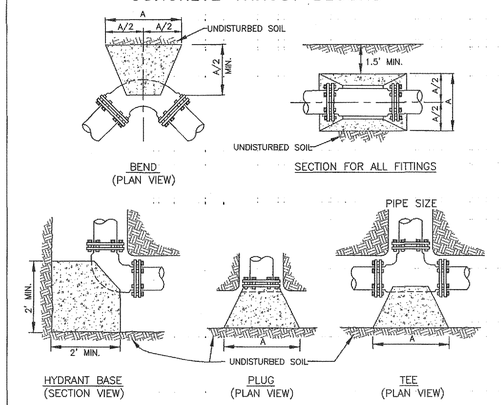

FITTING	MINIMUM "A" DIMENSION (FEET) PIPE SIZE (INCHES)								
	2	4	6	8	12	16	20	24	30	36
90° BEND	1.0	2.0	2.5	3.5	5.0	6.5	8.0	10.0	12.0	14.5
45° BEND	1.0	1.5	2.0	2.5	4.0	5.0	6.0	7.0	9.0	10.5
22 1/2° BEND	0.5	1.0	1.5	2.0	3.0	3.5	4.5	5.0	6.5	7.5
11 1/4° BEND	0.5	1.0	1.0	1.5	2.0	2.5	3.0	4.0	4.5	5.5
PLUG/TEE	1.0	1.5	2.5	3.0	4.5	5.5	7.0	8.0	10.0	12.0

NOTE: ABOVE DIMENSIONS BASED ON THE FOLLOWING: 250 PSI WATER PRESSURE AND 2000 LB/SQ FT SOIL BEARING CAPACITY (SOFT CLAY)

CITY OF WINSTON–SALEM
DEPARTMENT OF PUBLIC WORKS
ENGINEERING DIVISION

N.T.S. REVISED 11–7–13 APPROVED

R:\Data\Utility\Utility Spec Drawings/conc_thrust_blocks2013.dwg VII–43

Stimmel

Stimmel Associates, PA
Landscape Architecture
Civil Engineering
Land Planning

601 N. Trade Street Suite 200
Winston Salem, NC 27101-2916
P: 336.723.1067 F: 336.723.1069

SEALS:

NCBEES CERT. NO.: C-1347

NORTH CAROLINA PROFESSIONAL ENGINEER SEAL 027912 2/8/16 KENNETH L. HOWARD III

PROJECT:

VILLAGE POINT
VILLAGE POINT DRIVE PHASE IV
CLEMMONS, NORTH CAROLINA

CLIENT:

THE VILLAGE OF CLEMMONS
3715 CLEMMONS ROAD
CLEMMONS, NC 27012
336-766-7511

DRAWN: JNG
DATE: 10/30/2015
REVISIONS:
2/8/16 Comments

JOB. NO: 15-077
SHEET TITLE:
WATER AND SEWER DETAILS

SCALE: NONE
SHEET NO.:
C-6.3

© STIMMEL ASSOCIATES, P.A.

P:\13-234\Drawings\CD\NCDOT Redesign\13-234 C-6.0 DETAILS.dwg - C-6.3 02/19/16 2:25pm

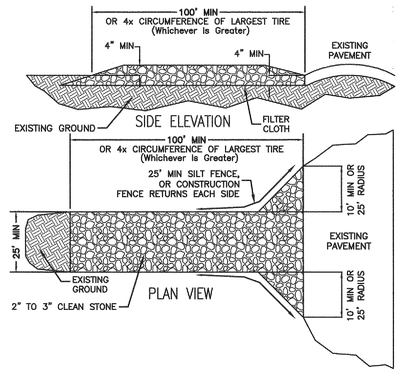

CONSTRUCTION SPECIFICATIONS:

* STONE – USE COARSE AGGREGATE (2 – 3 INCH STONE)
* LENGTH–AS EFFECTIVE, BUT NOT LESS THAN 100 FEET.
* THICKNESS–NOT LESS THAN 8 INCHES.
* WIDTH–NOT LESS THAN FULL WIDTH OF ALL POINTS OF INGRESS OR EGRESS.
* WASHING–WHEN NECESSARY WHEELS SHALL BE CLEANED TO REMOVE SEDIMENT PRIOR TO ENTRANCE ONTO PUBLIC RIGHT–OF–WAY. WHEN WASHING IS REQUIRED, IT SHALL BE DONE ON AN AREA STABILIZED WITH CRUSHED STONE WHICH DRAINS INTO AN APPROVED SEDIMENT TRAP OR SEDIMENT BASIN. ALL SEDIMENT SHALL BE PREVENTED FROM ENTERING ANY STORM DRAIN, DITCH,OR WATERCOURSE THROUGH USE OF SAND BAGS, GRAVEL, BOARDS, OR OTHER APPROVED METHODS.
* MAINTENANCE–THE ENTRANCE SHALL BE MAINTAINED IN A CONDITION WHICH WILL PREVENT TRACKING OR FLOWING OF SEDIMENT ONTO PUBLIC RIGHT–OF–WAY. THIS MAY REQUIRE PERIODIC TOP DRESSING WITH ADDITIONAL STONE AS CONDITIONS DEMAND AND REPAIR AND/OR CLEANOUT OF ANY MEASURES USED TO TRAP SEDIMENT. ALL SEDIMENT SPILLED, DROPPED, WASHED OR TRACKED ONTO PUBLIC RIGHTS–OF–WAY MUST BE REMOVED IMMEDIATELY.

1 STONE CONSTRUCTION ENTRANCE

N.T.S.

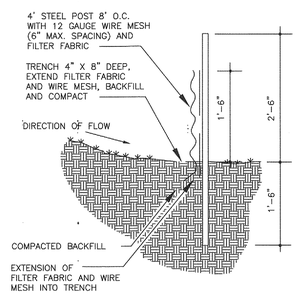

2 SILT FENCE

N.T.S.

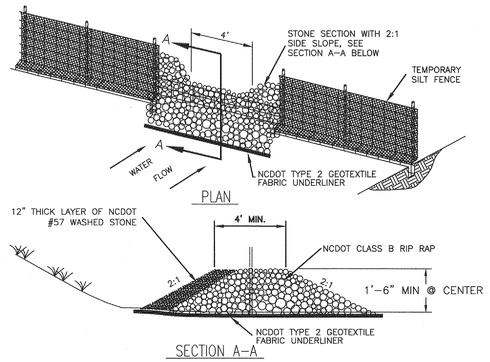

SILT FENCE OUTLET

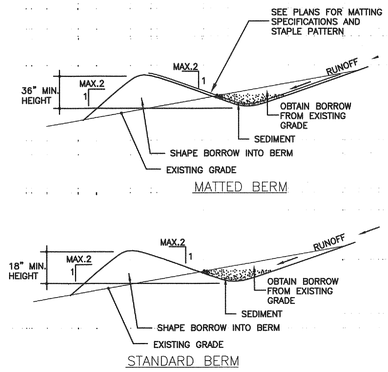

4 TEMPORARY DIVERSION BERM

N.T.S.

EACH SLOPE DRAIN TO HAVE A FLOC LOG BY APPLIED POLYMER SYSTEMS, INC(1–678–494–5298). INSTALLED IN THE UPSTREAM END, REPLACE AS NECESSARY SEE SHEET C–3.0 FOR ADDITIONAL NOTES.

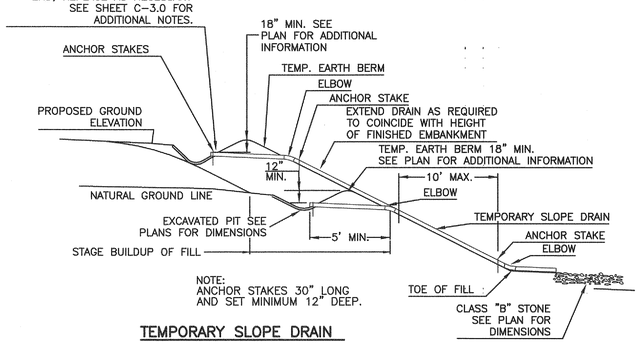

TEMPORARY SLOPE DRAIN

NOTES:
1. WHEN A LONG DELAY IS EXPECTED BETWEEN FINAL GRADE AND PLACEMENT OF A PERMANENT DRAINAGE SYSTEM PROTECT THE INLET BY PLACING A TEE SECTION ON THE INLET AND/OR BY LINING THE INLET AREA WITH CLASS B STONE OR ASPHALT CONCRETE PLANT MIX AS DIRECTED BY THE ENGINEER.
2. USE CLASS B STONE FOR EROSION CONTROL AT OUTLET LOCATIONS SUBJECT TO SCOURING. SILT BASIN TYPE B MAY ALSO BE UTILIZED TO CONTAIN SEDIMENT.

5 TEMPORARY SLOPE DRAIN

N.T.S.

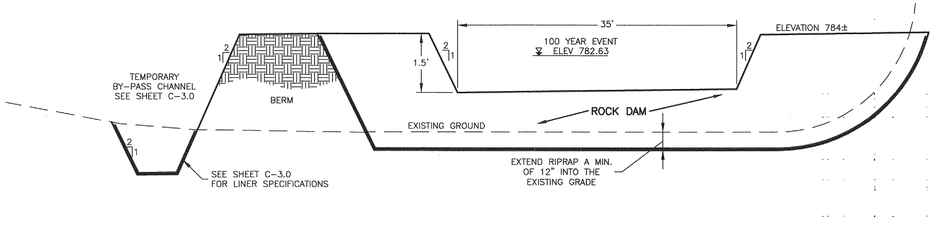

6 TEMPORARY ROCK DAM @ 66" RCP

SCALE: NTS

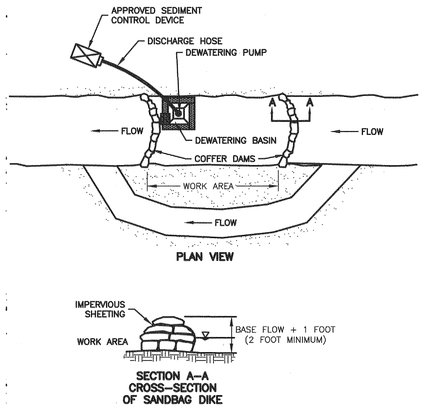

TEMPORARY BYPASS CHANNEL & DEWATERING DETAIL

SCALE: NTS

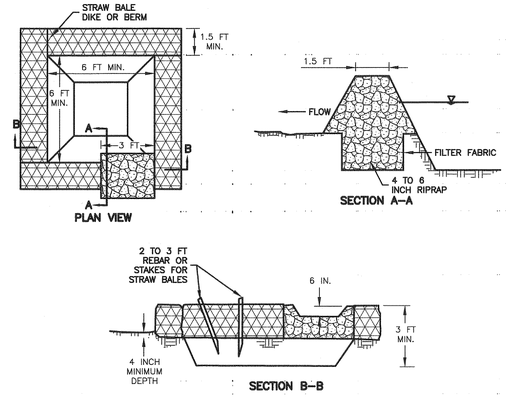

TEMPORARY DEWATERING BASIN DETAIL

SCALE: NTS

Stimmel

Stimmel Associates, PA
Landscape Architecture
Civil Engineering
Land Planning

601 N. Trade Street Suite 200
Winston Salem, NC 27101-2916
P: 336.723.1067 F: 336.723.1069

SEALS:

NCBEES CERT. NO.: C-1347

NORTH CAROLINA PROFESSIONAL ENGINEER SEAL 027912 2/8/16 KELLEY L. HOWARD III

PROJECT:

VILLAGE POINT
VILLAGE POINT DRIVE PHASE IV
CLEMMONS, NORTH CAROLINA

CLIENT:

THE VILLAGE OF
CLEMMONS
3715 CLEMMONS ROAD
CLEMMONS, NC 27012
336-766-7511

DRAWN:	JNG
DATE:	10/30/2015
REVISIONS:	
1 2/8/16 Comments	
JOB. NO:	15-077

SHEET TITLE:
EROSION CONTROL DETAILS

SCALE: NONE

SHEET NO.:

C-6.4

© STIMMEL ASSOCIATES, P.A.

F:\13-234\Drawings\CD\NCDOT Redesign\13-234 C-6.0 DETAILS.dwg :: C-6.4 02/19/16 2:31pm

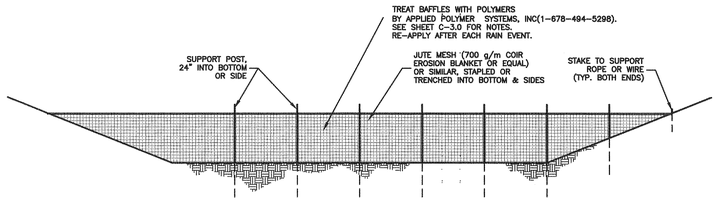

NOTE:

INSPECT BAFFLES AT LEAST ONCE A WEEK AND AFTER EACH RAINFALL. MAKE ANY REQUIRED REPAIRS IMMEDIATELY.

BE SURE TO MAINTAIN ACCESS TO THE BAFFLES. SHOULD THE FABRIC OF A BAFFLE COLLAPSE, TEAR, DECOMPOSE OR BECOME INEFFECTIVE, REPLACE IT PROMPTLY.

REMOVE SEDIMENT DEPOSITS WHEN IT REACHES HALF FULL TO PROVIDE ADEQUATE STORAGE VOLUME FOR THE NEXT RAIN AND TO REDUCE PRESSURE ON THE BAFFLES. TAKE CARE TO AVOID DAMAGING THE BAFFLES DURING CLEANOUT. SEDIMENT DEPTH SHOULD NEVER EXCEED HALF THE DESIGNED STORAGE DEPTH.

AFTER THE CONTRIBUTING DRAINAGE AREA HAS BEEN PROPERLY STABILIZED, REMOVE ALL BAFFLE MATERIALS AND UNSTABLE SEDIMENT DEPOSITS, BRING THE AREA TO GRADE AND STABILIZE IT.

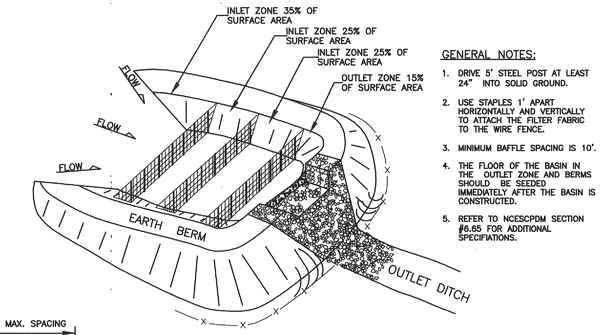

GENERAL NOTES:

1. DRIVE 5' STEEL POST AT LEAST 24" INTO SOLID GROUND.
2. USE STAPLES 1' APART HORIZONTALLY AND VERTICALLY TO ATTACH THE FILTER FABRIC TO THE WIRE FENCE.
3. MINIMUM BAFFLE SPACING IS 10'.
4. THE FLOOR OF THE BASIN IN THE OUTLET ZONE AND BERMS SHOULD BE SEEDED IMMEDIATELY AFTER THE BASIN IS CONSTRUCTED.
5. REFER TO NCESCPDM SECTION #6.65 FOR ADDITIONAL SPECIFIATIONS.

1 BAFFLE DETAIL

N.T.S.

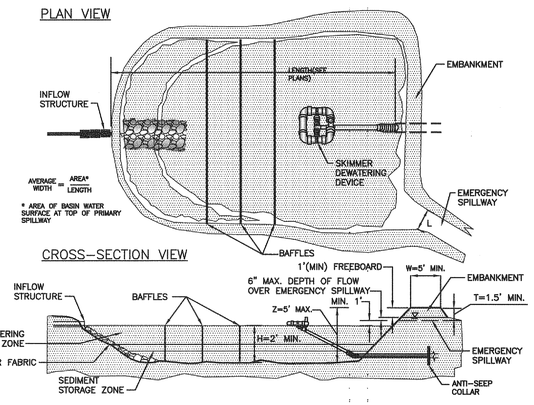

3 SKIMMER BASIN

N.T.S.

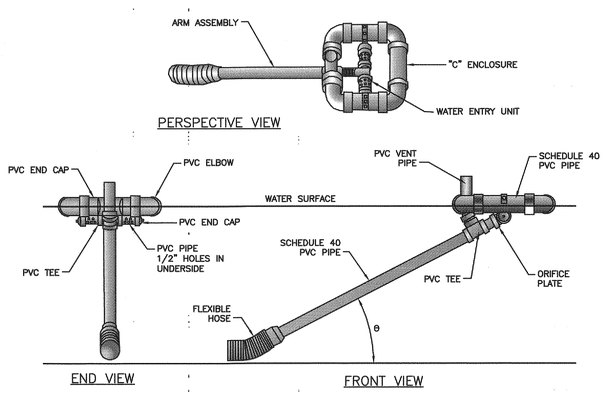

SKIMMER

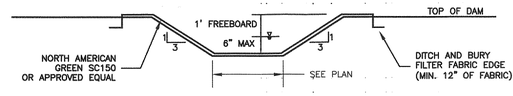

4 SKIMMER FILTER BASIN SPILLWAY

N.T.S.

STAPLE PATTERN GUIDE

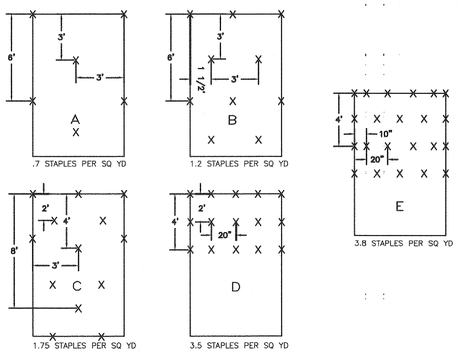

5 NORTH AMERICAN GREEN STAPLE PATTERNS

SCALE: NTS

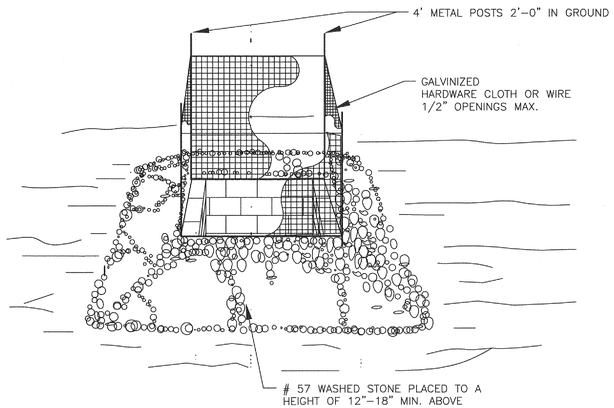

6 WIRE/STONE INLET PROTECTION

SCALE: NTS

NOTES:

1. La IS THE LENGTH OF THE RIPRAP APRON.
2. d= 1.5 TIMES THE MAXIMUM STONE DIAMETER BUT NOT LESS THAN 6 INCHES.
3. IN A WELL-DEFINED CHANNEL EXTEND THE APRON UP THE CHANNEL BANKS TO AN ELEVATION OF 6" ABOVE THE MAXIMUM TAILWATER DEPTH OR TO THE TOP OF THE BANK, WHICHEVER IS LESS.
4. A FILTER BLANKET OR FILTER FABRIC SHOULD BE INSTALLED BETWEEN THE RIPRAP AND SOIL FOUNDATION.

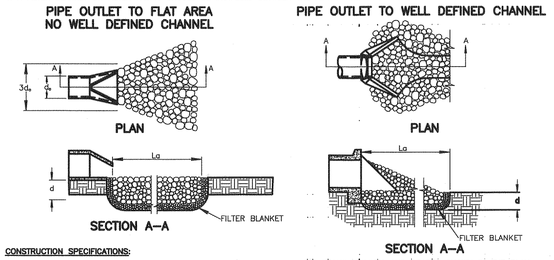

CONSTRUCTION SPECIFICATIONS:

1. ENSURE THAT THE SUBGRADE FOR THE FILTER AND RIPRAP FOLLOWS THE REQUIRED LINES AND GRADES SHOWN IN THE PLAN. COMPACT ANY FILL REQUIRED IN THE SUBGRADE TO THE DENSITY OF THE SURROUNDING UNDISTURBED MATERIAL. LOW AREAS IN THE SUBGRADE ON UNDISTURBED SOIL MAY ALSO BE FILLED BY INCREASING THE RIPRAP THICKNESS.
2. THE RIPRAP AND GRAVEL FILTER MUST CONFORM TO THE SPECIFIED GRADING LIMITS SHOWN ON THE PLANS.
3. FILTER CLOTH, WHEN USED, MUST MEET DESIGN REQUIREMENTS AND BE PROPERLY PROTECTED FROM PUNCHING OR TEARING DURING INSTALLATION. REPAIR ANY DAMAGE BY REMOVING THE RIPRAP AND PLACING ANOTHER PIECE OF FILTER CLOTH OVER THE DAMAGED AREA. ALL CONNECTING JOINTS SHOULD OVERLAP SO THE TOP LAYER IS ABOVE THE DOWNSTREAM LAYER A MINIMUM OF 1 FOOT. IF THE DAMAGE IS EXTENSIVE, REPLACE THE ENTIRE FILTER CLOTH.
4. RIPRAP MAY BE PLACED BY EQUIPMENT, BUT TAKE CARE TO AVOID DAMAGING THE FILTER.
5. THE MINIMUM THICKNESS OF THE RIPRAP SHOULD BE 1.5 TIMES THE MAXIMUM STONE DIAMETER.
6. RIPRAP MAY BE FIELD STONE OR ROUGH QUARRY STONE. IT SHOULD BE HARD, ANGULAR, HIGHLY WEATHER-RESISTANT AND WELL GRADED.
7. CONSTRUCT THE APRON ON ZERO GRADE WITH NO OVERFILL AT THE END. MAKE THE TOP OF THE RIPRAP AT THE DOWNSTREAM END LEVEL WITH THE RECEIVING AREA OR SLIGHTLY BELOW IT.
8. ENSURE THAT THE APRON IS PROPERLY ALIGNED WITH THE RECEIVING STREAM AND PREFERABLY STRAIGHT THROUGHOUT ITS LENGTH. IF A CURVE IS NEEDED TO FIT SITE CONDITIONS, PLACE IT IN THE UPPER SECTION OF THE APRON.
9. IMMEDIATELY AFTER CONSTRUCTION, STABILIZE ALL DISTURBED AREAS WITH VEGETATION (NCDENR'S PRACTICES 6.10, TEMPORARY SEEDING AND 6.11, PERMANENT SEEDING).

MEASUREMENT AND PAYMENT:

RIPRAP OUTLET STABILIZATION STRUCTURES SHALL BE MEASURED AND PAID FOR IN TONS OF STONE ACCEPTABLY PLACED. THE TYPE OF STONE TO BE USED AND PAID FOR SHALL BE INDICATED ON THE PLAN. PRICE BID SHALL INCLUDE INSTALLATION AND MAINTENANCE OF STONE AND FILTER FABRIC.

6 RIP RAP OUTLET

SCALE: NTS

Stimmel

Stimmel Associates, PA
Landscape Architecture
Civil Engineering
Land Planning

601 N. Trade Street Suite 200
Winston Salem, NC 27101-2916
P: 336.723.1067 F: 336.723.1069

SEALS:

NCBEES CERT. NO.: C-1347

NORTH CAROLINA PROFESSIONAL ENGINEER SEAL 027912 7/6/16 KELLEY L. HOWARD III

PROJECT:

VILLAGE POINT
VILLAGE POINT DRIVE PHASE IV

CLEMMONS, NORTH CAROLINA

CLIENT:

THE VILLAGE OF CLEMMONS
3715 CLEMMONS ROAD
CLEMMONS, NC 27012
336-766-7511

DRAWN:	JNG
DATE:	10/30/2015

REVISIONS:

1	2/8/16	Comments

JOB. NO:	15-077

SHEET TITLE:

EROSION CONTROL DETAILS

SCALE:

SHEET NO.:

C-6.5

© STIMMEL ASSOCIATES, P.A.

F:\13-234\Drawings\CD\NCDOT Redesign\13-234 C-6.0 DETAILS.dwg : C-6.5 02/19/16 2:32pm

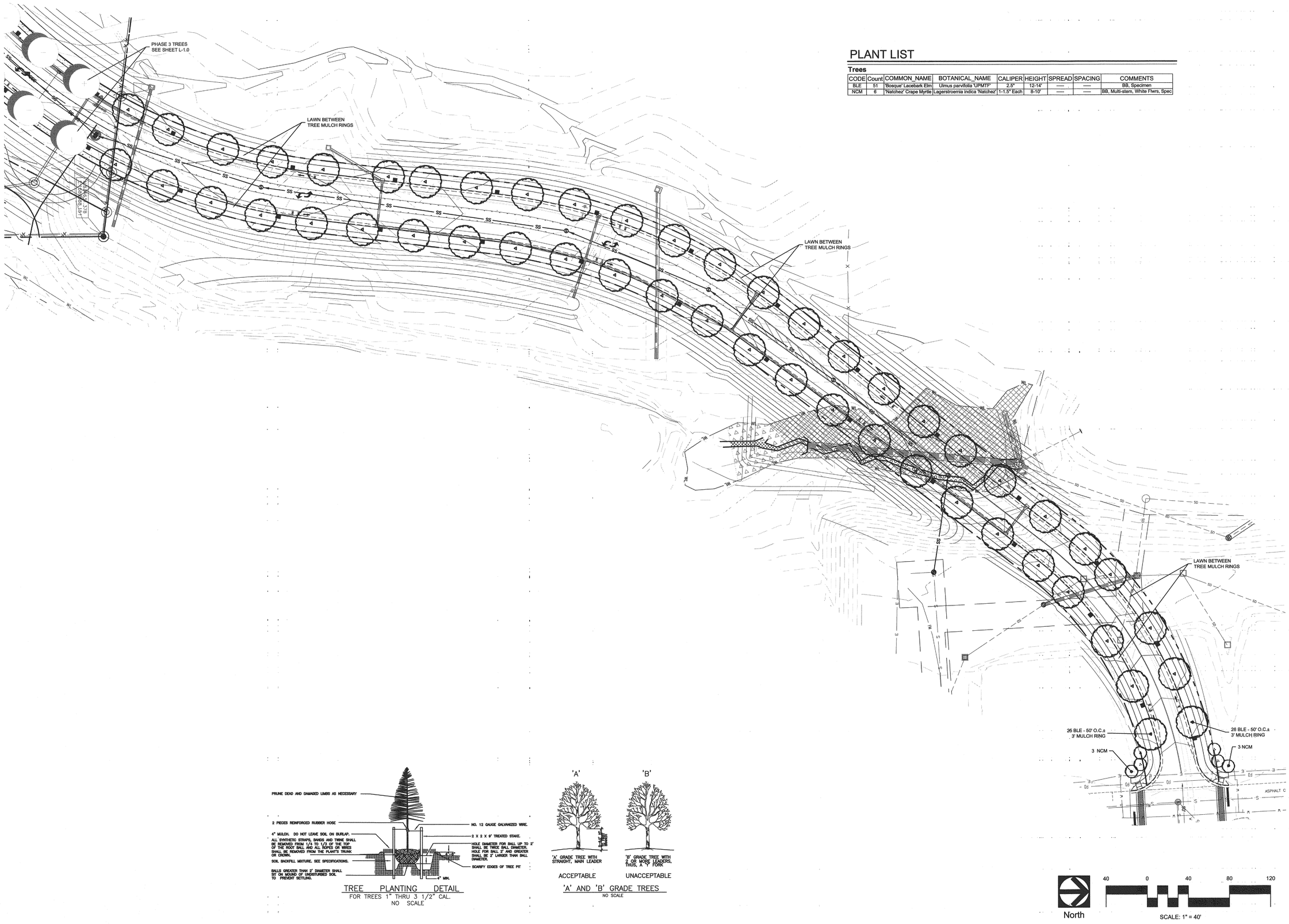

PLANT LIST

Trees

CODE	Count	COMMON_NAME	BOTANICAL_NAME	CALIPER	HEIGHT	SPREAD	SPACING	COMMENTS
BLE	51	'Bosque' Lacebark Elm	Ulmus parvifolia 'UPMTF'	2.5"	12-14'	-----	-----	BB, Specimen
NCM	6	'Natchez' Crape Myrtle	Lagerstroemia indica 'Natchez'	1-1.5" Each	8-10'	-----	-----	BB, Multi-stem, White Flwrs, Spec

TREE PLANTING DETAIL
FOR TREES 1" THRU 3 1/2" CAL.
NO SCALE

'A' AND 'B' GRADE TREES
NO SCALE

North

40 0 40 80 120

SCALE: 1" = 40'

F:\15-077\Drawings\CD\15-077 -LAND Ph 3_Ph 4.dwg : L-1.1 02/19/16 9:48am

Stimmel

Stimmel Associates, PA
Landscape Architecture
Civil Engineering
Land Planning

601 N. Trade Street Suite 200
Winston Salem, NC 27101-2916
P: 336.723.1067 F: 336.723.1069

SEALS:

STIMMEL ASSOCIATES, P.A. CORPORATE SEAL C-69 NORTH CAROLINA

NORTH CAROLINA LANDSCAPE ARCHITECT 1161 KIMBERLY M. BARB

PROJECT:

VILLAGE POINT
VILLAGE POINT DRIVE PHASE IV

CLEMMONS, NORTH CAROLINA

CLIENT:

THE VILLAGE OF
CLEMMONS
3715 CLEMMONS ROAD
CLEMMONS, NC 27012
336-766-7511

DRAWN:	KMB, TAG, JNG
DATE:	2/8/2016
REVISIONS:	
JOB. NO:	15-077

SHEET TITLE:

STREET TREE PLANTING PLAN PH4

SCALE:

SHEET NO.:

L-1.1

© STIMMEL ASSOCIATES, P.A.

LANDSCAPE WORK SPECIFICATIONS:

PART 1 - GENERAL

DESCRIPTION OF WORK:

Extent of landscape work includes furnishing all materials, equipment and labor necessary for preparation of bed subgrades in planting areas; distribution/ application of topsoil; soil treatment; planting of trees and shrubs; protection/ maintenanace/guarantee/replacement of plants; related items required to complete work indicated on drawings and specifications. (See Landscape Plan.)

GUARANTEE:

Guarantee trees/shrubs/lawn/grass for period of one year after date of acceptance, against defects including death and unsatisfactory growth, except for defects resulting from neglect by Owner, abuse/damage by others, or unusual phenomena/incidents which are beyond landscape installer's control.

Remove/replace trees, shrubs, grass or other plants found to be dead or in unhealthy condition during warranty period. Make replacements during growth season following end of warranty period. Replace trees/shrubs which are in doubtful condition at end of warranty period, unless, in opinion of Landscape Architect, it is advisable to extend warranty period for a full-growing season.

Another inspection will be conducted at end of extended warranty period, if any, to determine acceptance/rejection. Only one replacement will be required at end of guarantee period, except for losses/replacements due to failure to comply with specified requirements.

INDUSTRY STANDARDS:

Some products and execution are specified in this Section by reference to published specifications or standards of the following (with respective abbreviations used). Reference is to the latest edition of the standard referenced.

The American Society for Testing and Materials (ASTM)
Association of Official Agricultural Chemists (AOAC)
American Association of Nurserymen (AAN)
U.S. Department of Agriculture (USDA)

SUBMITTALS:

Substitutions shall not be considered unless it can be reasonably demonstrated that material specified is or shall be unavailable within 500 miles of the site of the work at the time of installation. Landscape Architect shall authorize the nearest equivalent obtainable size/variety of plant having some essential characteristics with equitable adjustment of contract price. Unit price of substituted item shall not exceed bid item being replaced. All submittal requests are to be made in writing.

Certificates: All material whose transportation requires inspection and/or certification by any governmental agency shall be accompanied by copies of certification or inspection which shall be given to a selected representative at the site at the time of delivery.

Soil PH Testing: Landscape contractor to submit a soil sample to test the current PH Level, once beds are defined and prior to any planting. The PH Level must be (5.8-6.2) and approved by the Landscape Architect prior to any plant installation.

QUALITY ASSURANCE:

General: Ship landscape materials covered and with certificates of inspection required by governing authorities. Comply with regulations applicable to landscape materials. All plant material must be "nursery grown". All plant material collected from naturalized areas will be rejected.

Soil Ph: Landscape Contractor to submit a soil sample, once beds are amended and prior to planting. The Ph must be correct and checked by Landscape Architect prior to any planting.

Topsoil: Provide topsoil of a type that is in compliance with Part 2 - Products of this section.

Plant List: List of plants as shown on drawings (Sheets L-1 - L-2).

Quantities: Quantities necessary to complete plantings as shown/located on drawings shall be furnished. Quantities shown in list are for convenience of contractors and believed to be substantially correct, but accuracy of quantities in list is not guaranteed.

Trees and Shrubs: Provide trees and shrubs grown in a recognized nursery in accordance with good horticultural practice. Provide healthy, vigorous stock free of disease, insects, eggs, larvae, and defects such as knots, sun-scald, injuries, abrasions, or disfigurement. All shade trees to be 'A' grade trees (see detail below).

Sizes: Provide trees and shrubs of sizes shown or specified in Plant List, which are minimum acceptable sizes and shall be measured before pruning with branches in normal position. Any necessary pruning shall be done at time of planting. Trees and shrubs of larger size may be used if acceptable to Landscape Architect, and if sizes of roots or balls are increased proportionately.

Tagging Trees: Landscape Architect reserves the right to tag specimen trees (See General Notes) at place of growth for compliance with requirements for size and quality assurance. Landscape Contractor recommended to use the following nurseries for the supply of trees:

-Shady Grove	(803-534-6683)	-Select Trees	(706-769-9879)
-Bold Springs	(770-267-9196)	-Lone Oak	(706-637-6240)
-Green Thumb	(910-428-4587)	-Gilmore Plant & Bulb Co.	(336-685-4451)
-Worthington Farms	(252-756-3827)		

Inspection: Landscape Architect reserves the right to inspect trees and shrubs either at place of growth or at site, for compliance with requirements for name, variety, size and quality.

DELIVERY, STORAGE AND HANDLING:

Packaged Materials: Deliver packaged materials in containers showing weight, analysis and name of manufacturer. Protect materials from deterioration during delivery, and while stored at site.

Trees, Shrubs & Transplanted Trees: Provide freshly dug trees and shrubs. Do not prune prior to delivery. Do not bend or bind-tie trees or shrubs in such manner as to damage bark, break branches or destroy natural shape. Provide protective covering during delivery. All trees, shrubs & groundcovers much be delivered in a completely tarped and covered vehicle or the entire load will be refused. Immediately after unloading, trees to be set upright never placed lying down. Always lift and move trees by strapping on root ball or by using chain cradle on the root ball for larger root balls.

JOB CONDITIONS:

Irrigation System: Irrigation system to be provided by Landscape Contractor. He shall be responsible for all coordination required to install the irrigation system. Contractor to visit the site and coordinate all sleeving with General Contractor during grading phase.

Proceed with and complete landscape work as rapidly as portions of the site become available, working within seasonal limitations for each kind of landscape work required. See "Landscape Construction Sequence".

Utilities: Determine location of underground utilities and perform work in a manner which will avoid possible damage. Hand excavate, as required. Maintain grade stakes set by others until removal is mutually agreed upon by parties concerned.

Coordination with Other Work: Plant new trees and shrubs after final grades are established and prior to planting of lawns, unless otherwise acceptable to Landscape Architect. If planting of trees and shrubs occurs after lawn work, protect lawn areas and promptly repair damage to lawns resulting from planting operations.

PART 2 - PRODUCTS

Topsoil: Additional topsoil to be furnished at no cost to Owner. Topsoil to be natural, fertile, friable soil, possessing characteristics of representative productive soils in vicinity; obtained from naturally well-drained areas; not excessively acid/ alkaline nor contain toxic substances harmful to plant growth; without admixture of subsoil and cleaned and reasonably free from clay/lumps/stone/ stumps/roots or similar substances 2" or more in diameter/debris/objects which might hinder planting operations. Landscape Architect requests topsoil by Pope Sand & Gravel of Winston-Salem, PH# (910) 765-3130.

Lime: Ground limestone containing not less than 85% total carbonates to such fineness that 50% will pass through a 100-mesh sieve and 90% will pass through a 20-mesh sieve. Use as necessary for specific plants.

Commercial Fertilizer: Organic fertilizer Stay Green Nursery Special 12-6-6 or approved equal; delivered dry/free-flowing in original unopened containers, each bearing manufacturer's guaranteed analysis, shall conform to applicable State Fertilizer laws. Any fertilizer which becomes caked/damaged, making it unsuitable for use, will not be accepted.

Pre-emergence Herbicide: Landscape Contractor to apply pre-emergence Herbicides as per manufacturer's specifications in all plant beds prior to final mulch application.

Soil Mix: All plant beds shall be composed of the following:
1 part Existing Soil
1 part Topsoil
1 part Pine Bark Soil Conditioner

Soil Conditioner: Soil Conditioner shall be small pine bark particles of 3/8" or less, provided in prepackaged bags or approved bulk delivery.

Mulch: Contractor shall supply/place double shredded hardwood mulch 3" depth moistened at time of application to prevent wind displacement; bed mulched instead of pit mulched.

Water: Furnished by Owner, suitable for irrigation and free from ingredients harmful to plant life.

Materials for Staking Trees: Contractor shall place stakes of sound new hardwood, treated softwood or redwood, free of knot holes/defects. Provide wire ties/guys of 2-strand twisted, pliable, #2-12 gage, galvanized iron wire, zinc-coated turnbuckles. Provide not less than 1/2" hose, cut to required lengths to protect tree trunks from damage.

PART 3 - EXECUTION

PLANTING:

Layout: Location for plants/outlines of areas to be planted are indicated on plan. Where construction and utilities below ground or overhead are encountered or where changes have been made in construction, necessary adjustments to be approved by Landscape Architect.

Soil Preparation: Soil shall be as specified; be in relatively dry state and mixed thoroughly by hand or rotary mixer. Commercial fertilizer at rate of 2#/c.y. shall be added. All planting beds shall be coated with approved pre-emergence weed killer according to manufacturer's specifications. All shrub planting areas to be bed prepared and not just pit prepared/planted unless approved by Landscape Architect. Soil shall be prepared minimum of one week prior to planting day, for proper settling.

Landscape Contractor responsible for all shaping and fine grading of bermed areas. General Contractor to provide topsoil. See Landscape Plans for locations.

Landscape Contractor responsible for all fine grading of areas to receive seeding.

For pit/trench backfill, mix planting soil prior to backfilling and stockpile at site.

For planting beds, mix planting soil thoroughly prior to planting or apply on surface of topsoil.

For plant beds against building foundations, soil mix shall be mixed thoroughly prior to placement. Prevent lime from contacting roots of acid-loving plants. Prepare soil mix as specified to minimum depth of 6" below largest shrub root ball.

Ball/Burlapped Plants: After final setting loosen wrappings of balled/burlapped plants and roll wrappings back from top of ball leaving ball unbroken. Cut off excessive amounts of burlap, remove sufficient quantity to eliminate creation of voids upon decomposition.

Container Grown Plants: These may be applied in lieu of balled/burlapped plants if all other specified requirements are met; plants to have grown in container for minimum of six months and maximum of two years and when delivered, have sufficient root growth to hold earth intact when removed from container; plants must not be root bound. Remove container in way to prevent damage to plant/root system.

Tree Pit Sizes: Minimum diameter/depth of planting pits for balled/burlapped, bare roots and container grown plants shall be 24" greater than diameter of ball/spread of roots and trees sit directly on pit bottom to prevent settlement.

Shrubs/Groundcover: "All plant beds for shrubs/groundcovers to be prepared for a total depth of 9" and should consist of 1 part existing soil, 1 part topsoil and 1 part soil conditioner (see soil mix). Till existing soil to a minimum depth of 3"; add 3" of topsoil and till thoroughly; add 3" of pine bark soil conditioner and till with other amendments to a total depth of 9". Entire bed to be covered with 3" of double shredded hardwood mulch.

Lawn - Seeding: All unpaved disturbed areas (or lawn to be reestablished), excluding areas to be sodded, outside planting bed to be seeded with an even mixture of Hunter, Padre, and Magellan tall fescues, or approved equal, at a rate of 5-6 lbs./1,000 s.f. so as to produce a thick, firm stand of grass. Fertilize at a rate of 10 lbs./1,000 s.f. with 10-10-10 slow-release fertilizer (use straw or other material to cover seed until stable.) Apply lime according to soil test, or apply 4,000 lbs./acre slow-release pelletized agricultural limestone.

Seeding dates: Aug. 20 through Oct. 25 and Feb. 1 through May.

Setting Trees: All trees to be planted according to Planting Details shown on Landscape Plans. Unless otherwise specified, all trees to be planted in pits, centered, set on unexcavated soil to depths that finished grade level of plant after settlement shall be same as that which plant was grown; plant upright and faced to give best appearance/ relationship to adjacent structures; plant above grade 3/4" for every foot of ball diameter. Place tree root balls at a level where the trunk flare will be 2" above surrounding finished grade. No burlap to be pulled out from under balls; remove platforms, wire and surplus binding from top/sides of balls; cut broken/frayed roots; place/compact prepared soil to avoid injury to roots and fill all voids. Saturate the planting hole with water after backfill is 3/4 complete and allow to soak away; fill hole to finished grade, allowing 4" of mulch; form shallow saucer around each plant.

Pruning New Plant Material: Remove dead/broken branches from all plant material. Prune all trees/ shrubs to a branch node and remove only as much foliage as necessary for neat appearance while retaining natural growth habit of plant variety. Prune away crossing limbs or water sprouts/ shoots from trees always leaving branch collar intact (no additional stub length). Under cut larger limbs to prevent tearing of the bark. Girdling roots of trees should be cut at this time to prevent future problems. Make all cuts with sharp pruning equipment. Topping of trees and wound painting are NOT permitted. Remove trimmings from the site.

Guying Trees: All canopy trees 2" caliper or greater shall be staked and guyed. Landscape Contractor is responsible to remove all stakes and guys at the end of the one year warranty period. See Planting/Staking Details.

Mulching: Trees/shrubs shall be mulched immediately after planting with 3" depth of hardwood mulch. Prevent wind displacement of mulch by thoroughly wetting down. Mulch the area over tree rootballs to a depth no deeper than 1.5-2". Keep all mulch away from the trunk flare. If plant has existing mulch, remove old mulch before applying new mulch.

Excess Excavated Soil:

To be disposed of by Contractor at no additional expense to Owner.

MAINTENANCE:

Begin immediately after planting. Maintain trees/shrubs/other plants until final acceptance. Maintain trees/shrubs/other plants by pruning, cultivating, weeding as required for healthy growth. Restore planting saucers; tighten/repair stake and guy supports and reset trees/shrubs to proper grades/vertical position as required. Restore/replace damaged wrappings. Spray as required to keep trees/shrubs free of insects/disease.

CLEANUP AND PROTECTION:

During landscape work keep pavements clean, work area in orderly condition; protect work/materials from damage due to landscape operations, operations by other contractors/trades/trespassers. Maintain protection during installation/maintenance periods. Treat/repair/replace damaged landscape work as directed.

INSPECTION:

See "Landscape Construction Sequence" on Landscape Plans. When landscape work is complete, including maintenance, Landscape Architect will, upon request, make inspection to determine acceptability. Landscape work may be inspected for acceptance in parts agreeable to Landscape Architect, provided work offered for inspection is complete, including maintenance. Where inspected landscape work does not comply with requirements, replace rejected work, continue specified maintenance until reinspected by Landscape Architect and found to be acceptable. Remove rejected plants/materials promptly from project site.

SPECIAL CONDITIONS:

1. Landscape contractor is responsible for coordinating a "site acceptance inspection" with the owner, General Contractor and Architect prior to start of construction.
2. Landscape contractor to submit a soil sample, once beds are amended and prior to planting. The ph must be correct and checked by Landscape Architect prior to any planting.
3. Landscape contractor is responsible for providing topsoil in traffic islands so there is a crown of 10-12" at the center of each island
4. All canopy trees 2" caliper or greater shall be staked and guyed. Landscape contractor is responsible to remove all stakes and guys at the end of the one year warranty period.
5. All tree-form and multi-stem trees to have multiple trunks (min 3 each) and be limbed up a min. of 3.0.' All large canopy trees to have the height of their first branches 5-6' above ground. All columnar and single story trees to have the height of their first branches 4-5' above ground.
6. Soil mix for all perennial areas to be 6" thick "metro-mix" from Southern Agricultural Insecticide, Boone, NC (1-800-477-8843).
7. All perennial areas (i.e. Stella D'oro daylilies) to be mulched with mini-pine bark nuggets. Plant beds at public doors to be mulched with mini-pine bark nuggets.

GENERAL LANDSCAPE NOTES:

1. General Contractor to use licensed Landscape Contractors with Landscape Architect prior to bidding. Bids using Landscape Contractors not pre-approved will not be considered.

Landscape Contractor to:

1. Follow landscape construction sequence.
2. Contact General Contractor prior to submitting bid to verify any phasing of planting areas.
3. Fine grade all grass and planting areas disturbed during construction. Remove from site all temporary seeding/stabilization, stones, gravel and all extraneous debris including roots and limbs prior to sodding/seeding. When fine grading insure that positive drainage is occurring.
4. Till and amend all plant beds as required in specifications. Apply pre-emergence herbicides per manufacturer's specifications in all plant beds prior to any planting. Cover entire bed with a 3" min. clean mulch immediately after planting. Site mulch to be double shredded hardwood mulch except for plant beds at the public doors--use mini-pine bark nuggets.
5. Bring to the attention of the Landscape Architect any debris or poor soils remaining in parking lot islands after general construction and prior to planting.
6. Verify all underground utilities prior to installation of any plant materials. Utilities shown on plan are for reference only and may not be all inclusive. See General Contractor for as-built drawings for all underground utilities.
7. Provide 3' diameter mulch rings for all trees in grass areas.
8. Insure that all tree mulch rings are a minimum of 2.0' from the edges of shrub beds and curbs.
9. Neatly edge all plant bed/grass borders with a straight "V"-cut edge.
10. Insure all trees of same variety match in shape and size where they are to be installed in groups, rows or as street trees.
11. Obtain authorization prior to any changes of plant location due to utilities or other factors.
12. Protect all existing structures (i.e.. Curb and gutter, pavement, etc.) During installation of large trees and other plants.
13. Prior to seeding, verify that all trenching and other land disturbing activities within areas to be seeded have been completed.

LANDSCAPE CONSTRUCTION SEQUENCE:

Landscape Contractor to:

1. Visit site after authorization by General Contractor to begin, and accept/reject condition of site prior to any planting.
2. Coordinate irrigation system installation, including all sleeving, with General Contractor during grading phase of work.
3. Stake and till entire plant beds and include fertilizer, pre-emergence herbicides and soil mix per specifications.
4. Transport all plants to site covered. Any plants damaged during or prior to shipping to the site will not be accepted.
5. Contact Architect for approval/denial of all plant beds and plant stock prior to installation.
6. Proceed according to planting plan upon approval by Architect of plants and plant bed staking and preparation.
7. Contact Architect, upon completion of work, for final approval of work.
8. Make necessary adjustments for approval. Landscape Contractor responsible for contacting the G.C. to set a meeting to review the punch items.
9. Maintain all plant material according to specifications/warranty.
10. Immediately remove/replace any dead or dying plants during warranty period.

PERMANENT SEEDING:

All unpaved disturbed areas (or lawn to be reestablished) outside planting bed to be seeded with an even mixture of Hunter, Padre, and Magellan tall fescues, or approved equal, at a rate of 5-6 lbs./1,000 s.f. so as to produce a tbick, firm stand of grass. Fertilize at a rate of 10 lbs./1,000 s.f. with 10-10-10 slow-release fertilizer (use straw and asphalt emulsion to cover seed until stable.) Apply lime according to soil test, or apply 4,000 lbs./acre slow-release pelletized agricultural limestone.
Seeding dates: Aug. 20 through Oct. 25 and Feb. 1 through May.

SEEDBED PREPARATION:

1. Remove any undesirable ground covers including any temporary seeding.
2. Rip the area to be seeded to a min. Depth of 4"-6."
3. Remove all loose rocks, roots, etc. Leaving surface smooth and uniform.
4. Apply seed, agricultural lime, and fertilizer uniformly and mix with the soil.
5. Mulch immediately after seeding and anchor mulch.

SOIL MIX (SEE SPECS.):

One part existing soil
One part topsoil
One part pine bark soil conditioner

Planting bed depth to be a minimum of 9"

SOIL PREPARATION:

1. Prepare all shrub beds to a total depth of 9."
2. Till existing subsurface soil to a minimum 3" depth.
3. Add 3" of topsoil and till with existing soil.
4. Add 3" of pine bark soil conditioner and till thoroughly with other amendments.

TEMPORARY SEEDING

1. Chisel compacted areas and spread topsoil 4 inches deep over adverse soil conditions, if available.
2. Rip areas to be seeded to a 6 inch depth.
3. Remove all rocks, roots and obstructions leaving surfaces reasonably smooth and uniform.
4. Apply agricultural lime and fertilizer uniformly and mix with soil (see * below).
5. Continue tillage until a well pulverized, firm, reasonably uniform seedbed is prepared 4-6 inches deep.
6. Seed on a freshly prepared seedbed and cover seed lightly.
7. Mulch immediately after seeding and anchor mulch
8. Inspect all seeded areas and make necessary repairs or reseeding within the planting season if possible. If grass stand should be over 60% damaged reestablish following original lime, fertilizer and seeding rates.
9. Consult erosion control inspector on maintenance, treatment and fertilization after permanent cover is established.

* Apply:
Fertilizer 10-10-10 - 1,000 lbs. / acre
Mulch - 2 tons (approx. 80 bales) small grain straw / acre
Anchor - tack with liquid asphalt @ 400 gal / acre or emulsified asphalt @ 400 gal / acre

PLANTS & MIXTURES	PLANTING RATES / ACRE	PLANTING DATES
Rye (Grain) &	120 lbs / Acre	Jan. 1 - May 1
Annual Lespedeza (Kobe)	50 lbs / Acre	
German Millet or	40 lbs / Acre	May 1 - Aug. 15
Sudangrass	50 lbs / Acre	
Rye (Grain)	120 lbs / Acre	Aug. 15 - Dec. 30

WATERING SCHEDULE

1. Landscape Contractor to provide watering schedule to General Contractor upon completion of plant material installation and date of acceptance for two (2) year warranty period.
2. Natural rainfall events of a minimum ½"-1" of rainfall per week will be sufficient to meet watering needs and would effect the watering schedule as they occur.
3. Landscape Contractor will be responsible for monitoring the Project Site rainfall events and coordinating supplemental watering with Owner during dry periods as necessary.
4. Watering schedule estimated sequence:

March - April	2 times per week (M & Th) for 1-3 minutes per shrub or perennial
May - August	3 times per week (MWF) for 1-3 minutes per shrub or perennial
September - October	2 times per week (M & Th) for 1-3 minutes per shrub or perennial

Stimmel

Stimmel Associates, PA
Landscape Architecture
Civil Engineering
Land Planning

601 N. Trade Street Suite 200
Winston Salem, NC 27101-2916
P: 336.723.1067 F: 336.723.1069

SEALS:

PROJECT:

VILLAGE POINT
VILLAGE POINT DRIVE PHASE IV
CLEMMONS, NORTH CAROLINA

CLIENT:

THE VILLAGE OF
CLEMMONS
3715 CLEMMONS ROAD
CLEMMONS, NC 27012
336-766-7511

DRAWN:	KMB, TAG, JNG
DATE:	2/8/2016
REVISIONS:	

JOB. NO: 15-077

SHEET TITLE:

LANDSCAPE NOTES, SPECS. & DETAILS

SCALE:

SHEET NO.:

L-2.0

© STIMMEL ASSOCIATES, P.A.

F:\15--077\Drawings\CD\15--077 --LAND Ph. 3_Ph. 4.dwg - L-2.0 02/19/16 9:48am